NOTES:
1. MATERIAL: CRES AISI 303 OR 304, CONDITION A AND SUB-ALLOYS (IE 303S OR 304L)
2. PASSIVATE IAW SAE-AMS-QQ-P-35

	-	RELEASE	1-24-03	JG
	A	RETRIEVE BLOCK TOL	2-28-03	JG
	B	MATERIAL CHANGE	3-14-03	JG

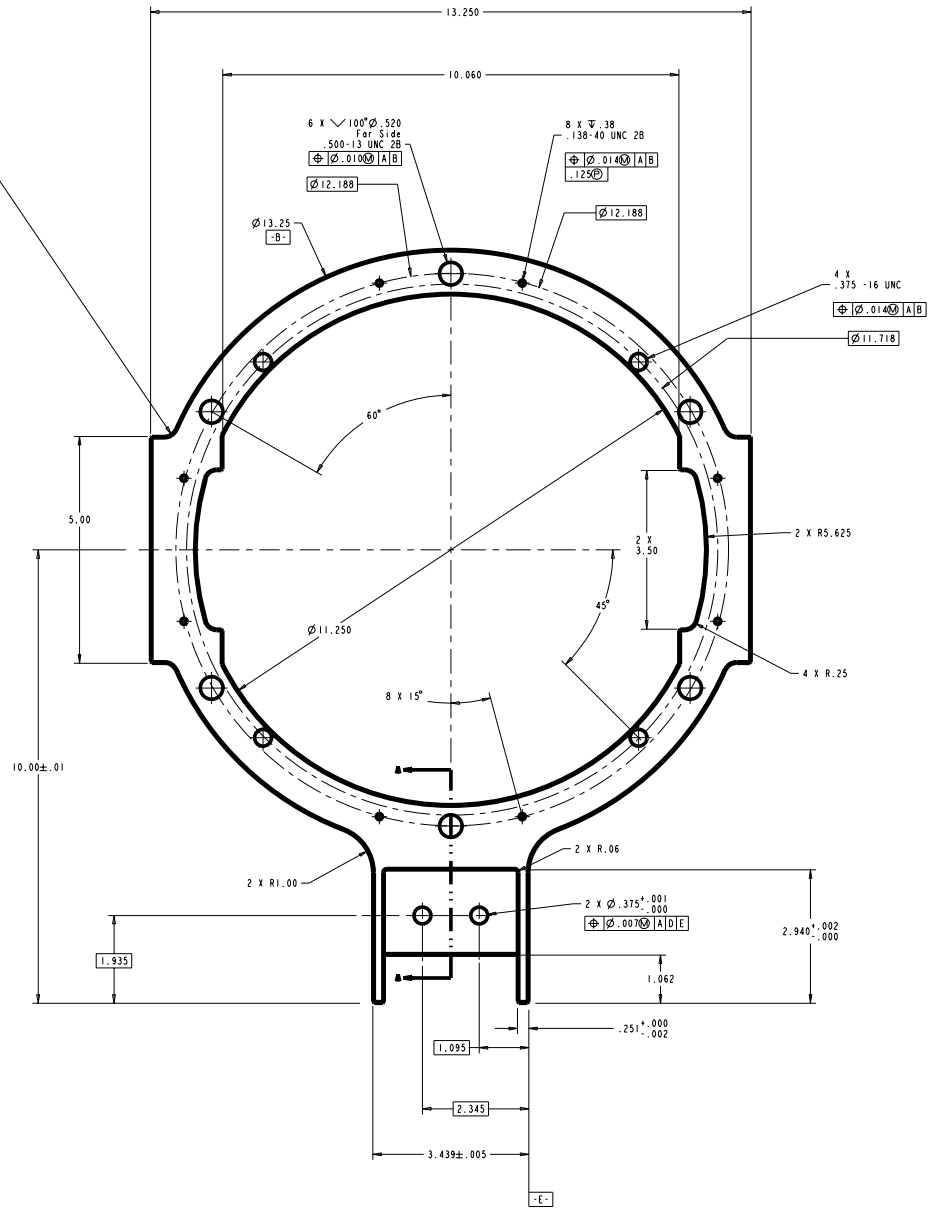

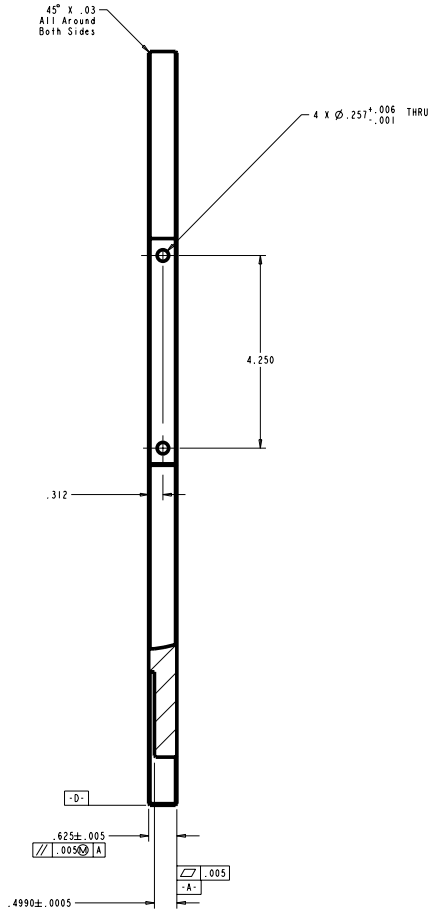

SECTION A-A

NEXT ASSY	USED ON		
APPLICATION			

See Note 1

PROJECT/SITE: FLIR A-KIT

DRAWN BY: KSL DATE: 12/23/02

CHECKED BY: DATE:

CONTRACT NO.:

DRAWING APPROVAL: DATE:

DESIGN APPROVAL: DATE:

RADIAN INC.

SUPPORT_PLATE_FLIR_BALL-REVB

SIZE E CODE IDENT 15GF6 DRAWING NO. NAV94301

SCALE: WEIGHT: SHEET 1 of 1

REV. NAV94301