ZONE	REV	DESCRIPTION	DATE	APPROVED
	-	RELEASE	1-24-03	JG
	A	PAINT COLOR CHANGE	4-4-03	JG

NOTES:

1. THESE SURFACES SHALL BE FREE OF PAINT
2. FINISH:
   A. PRIME PER MIL-P-53022, TYPE I.
   B. PAINT GRAY PER TT-P-2756, COLOR NO. 36375, PER FED-STD-595.
3. INSTALL ITEM 3 .010 TO .030 BELOW FLUSH
4. RUBBER STAMP PART NO. AND REVISION LEVEL IAW MIL-STD-130 WITH .12 HIGH CHARACTERS USING WHITE EPOXY INK PER A-A-56032, TYPE I, APPROXIMATELY WHERE SHOWN WITH THE FOLLOWING: 1S6F6/NAV94307
5. MARK "NO STEP" IAW MIL-STD-2161 IN APPROXIMATE LOCATION SHOWN. 1.00 INCH HIGH GOTHIC CHARACTERS USING COLOR 37038 IAW FED-STD-595
6. SECURE ITEM 9 USING ITEM 5, 4 PLACES

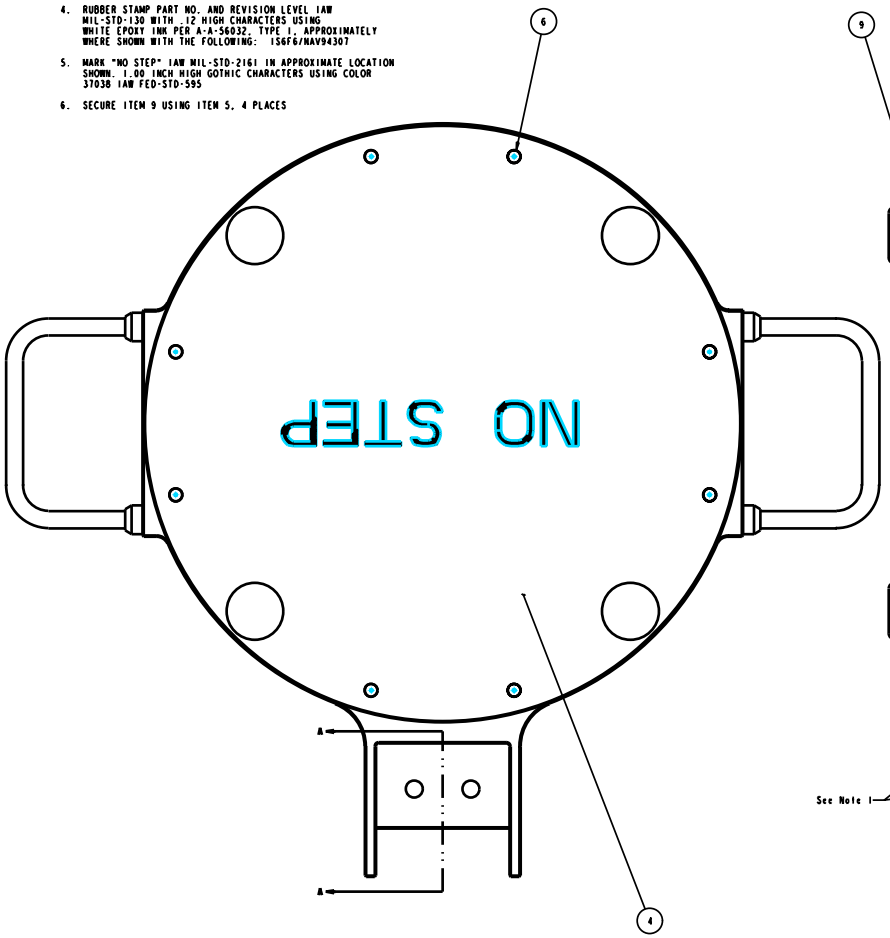

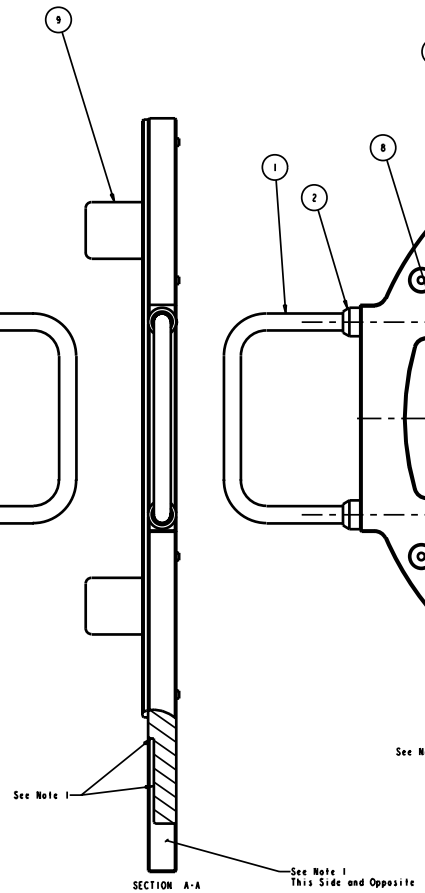

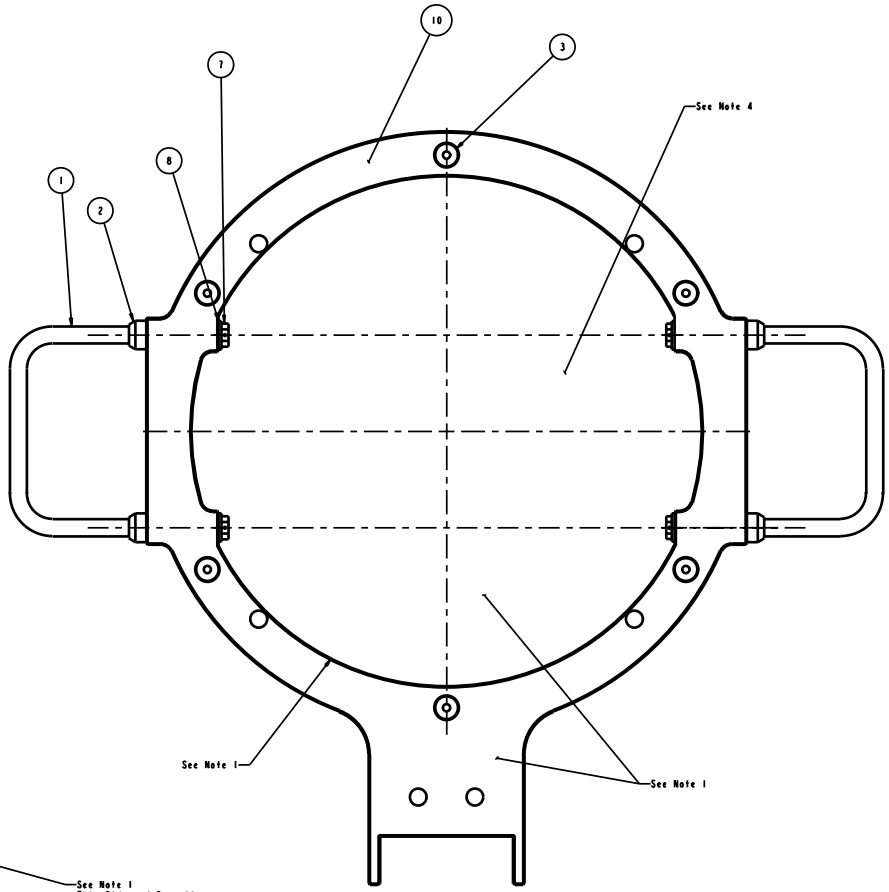

ITEM NO	PART NUMBER	PART NAME OR DESCRIPTION	SPECIFICATION	QTY
11		SAFETY_WIRE_MS20995C32		1
10	NAV94301	SUPPORT_PLATE_FLIR_BALL-REVNR		1
9		RB-3URM-10_BUMPER	Fairlane Products	4
8		NAS1149C0432R_FLAT_WASHER		4
7	NAV94103	MS35307-315_HEX_BOLT-REVNR		4
6		MS24693-C26_6-32_100_DEG		8
5		LOCTITE_271_AND_PRIMER_T		1
4	NAV94302	COVER_SUPPORT_PLATE-REVNR	Fairchild Fasteners	1
3		CA10862_FAIRCHILD		6
2		16024-SS_AMATOM_FERRULE	Amatom Electronic Hdwr	4
1		10577-SS-2520_AMATOM_HANDLE	Amatom Electronic Hdwr	2

NEXT ASSY	USED ON
APPLICATION	

UNLESS OTHERWISE SPECIFIED DIMENSIONS ARE IN INCHES
TOLERANCES ON:
2 PLACES ± 0.01 3 PLACES ± 0.001 ∠ ± 0.5°
DO NOT SCALE THIS DRAWING
DRAWN BY: HSL DATE: 12-4-01
CHECKED BY: DATE:
DESIGN APPROVAL: DATE:
CONTRACT NO.:
PROJECT/SITE:

RADIAN INC.
35353 Curtis Blvd.
Eastlake, Ohio 44095

SUPPORT_PLATE_REF_94307-01REVA

SIZE E | CAGE CODE 1S6F6 | DRAWING NO. NAV94307-01
SCALE | WEIGHT | SHEET 1 OF 1