	SPECIFICATION	TYPE - MODEL - SERIES
GOVT		
CONTR		

CONTRACT NO. F 33657-67-C-1120

DESIGN ACTIVITY
MILITARY EQUIPMENT
THE NATIONAL CASH REGISTER COMPANY
MAIN & K STREETS
DAYTON, OHIO 45409

DATE: AUG. 14, 19

APPROVED

42470	PL 81000042	A
CODE IDENT	SHEET 2 OF SHEETS	REV

ITEM NOMENCLATURE: LANYARD ASSEMBLY

ITEM NO.	SYMBOL	QTY REQD	NOMENCLATURE OR DESCRIPTION	CODE IDENT	PART OR IDENTIFYING NO.	SPECIFICATION	MATERIAL OR NOTES	UNIT WT
1	*	1	RING-ATLAS KEY, SLIP SLEEVE (LANYARD)		81000038			
2		AS REQ	NYLON CORD (1/16 DIA)			MIL-C-5040, TYPE 1, NATURAL		
3	*	AS REQ	HEAT SHRINKABLE TUBING		200014		TYPE FIT-300 BROWN	

* VENDORS ITEM - SPECIFICATION CONTROL OR SELECTED ITEM DWG.

SYM	DESCRIPTION	DATE	APPD	SYMBOLS
	FOR LATEST REV. SEE SHEET #1			

31000042_42470_PL_A_0002_0001_N_U
September 24, 2001 1:59 PM

	SPECIFICATION	TYPE - MODEL - SERIES
GOVT		
CONTR		

CONTRACT NO. F33657-67-C-1120

MILITARY EQUIPMENT
THE NATIONAL CASH REGISTER COMPANY
MAIN & K STREETS
DAYTON, OHIO 45409

DATE AUG. 14, 1968

APPROVED Don Koenigs KFB

42470	PL 81 000 042	A
CODE IDENT	SHEET 1 OF 2 SHEETS	REV

ITEM NOMENCLATURE:

LANYARD ASSEMBLY

APPLICATION							LTR	REVISION DESCRIPTION	DATE	APPD
ASSEMBLY IDENTIFYING OR DASH NO.	QTY REQD NEXT ASSY	QTY REQD FINAL ASSY	NEXT ASSEMBLY	USED ON TYPE - MODEL SERIES	SERIAL NO. FROM	SERIAL NO. THRU	A	ADDED - * AND, VENDORS ITEM NOTE C.O. #81-63	5/3/69	MK
			81 000 000	AN/URT-33						

RECORD OF REVISION STATUS OF EACH SHEET

1	2	3	4	5	6	7	8	9	10	11	12	13	14	15	16	17	18	19	20	21	22	23	24	25	26	27	28	29	30	31	32	33	34	35	36	37	38	39	40	41	42
A	A																																								

SYMBOLS:

81000042_42470_PL_A_0001_0001_N_U
September 24, 2001 1:51 PM

REVISIONS			
LTR	DESCRIPTION	DATE	APPROVED

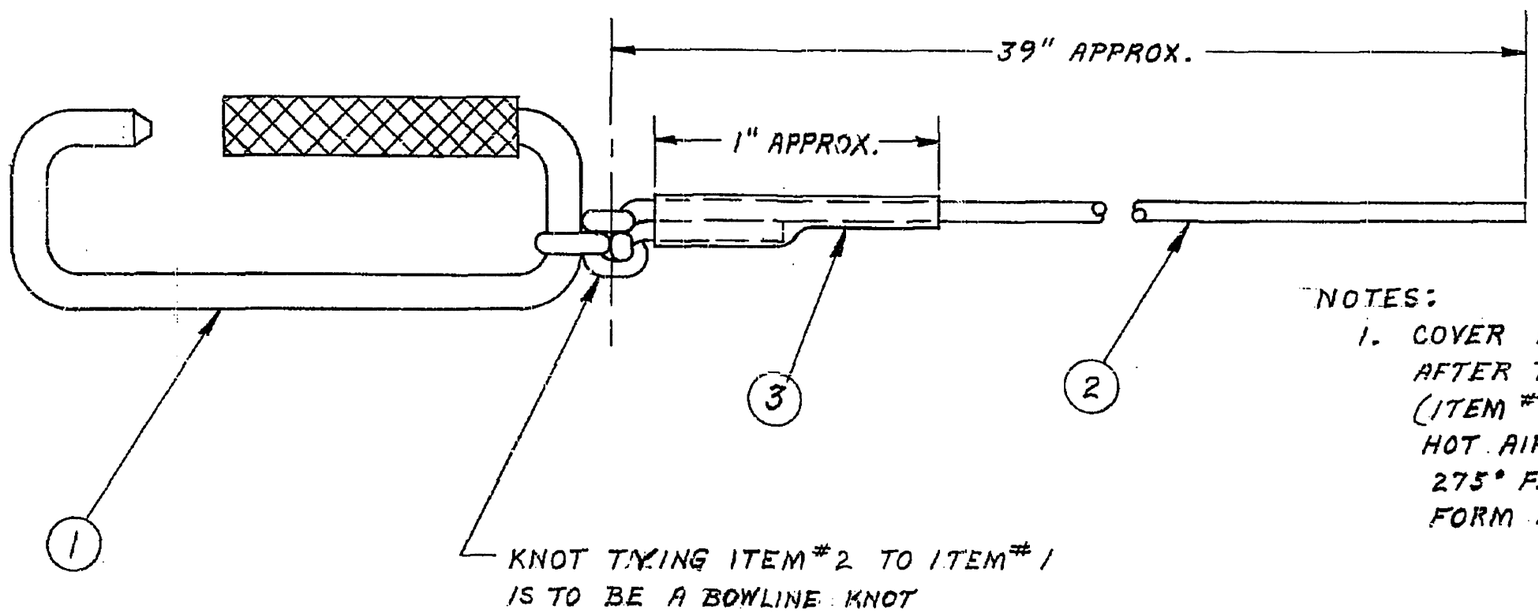

NOTES:

1. COVER ITEM #2 WITH ITEM #3 AS SHOWN AFTER TYING BOWLINE KNOT. SHRINK (ITEM #3) INSULATION USING A FLAMELESS HOT AIR GUN - HEAT TO APPROXIMATELY 275° F. UNTIL INSULATION SHRINKS TO FORM A TIGHT MECHANICAL BOND

FOR PARTS LIST SEE PL 81000042

INTERPRET DRAWING IN ACCORDANCE WITH STANDARDS PRESCRIBED BY MIL-D-1000

THE NATIONAL CASH REGISTER COMPANY

MILITARY EQUIPMENT / MAIN & K STREETS DAYTON, OHIO 45409

UNLESS OTHERWISE SPECIFIED DIMENSIONS ARE IN INCHES
TOLERENCES:
DECIMALS ~ FRACTIONS ~
MATL ~
HARD CASE DEPTH
SUR TREAT

APPROVALS

DRAWN	G. HOSBROOK	8-14-68
CHECKED	R. WEATHERBY	8-16-68
PROJ. IDENT.	AN/URT-33	
RELEASE DATE	R. WEATHERBY	10-28-68
APPROVED	KFB	28 Oct 68
APPROVED		10/28/68

LANYARD ASSEMBLY

NEXT ASSY	USED ON	SIZE	CODE IDENT NO.	
81 000 000	URT-33	B	42470	81000042
		SCALE 2/1	WT	SHEET 1

APPLICATION

X-1060-10 7-30-65 NCR

81000042_42470_DD_-_0001_0001_N_U
September 24, 2001 1:56 PM

81000038_42470_DD_A_0001_0001_N_U
September 24, 2001 2:05 PM

APPLICATION		REVISIONS			
NEXT ASSY	USED ON	LTR	DESCRIPTION	DATE	APPROVED
81000042	URT-33	A	REVISED NOTE 1 C.O. #81-96	7/10/69	[illegible]

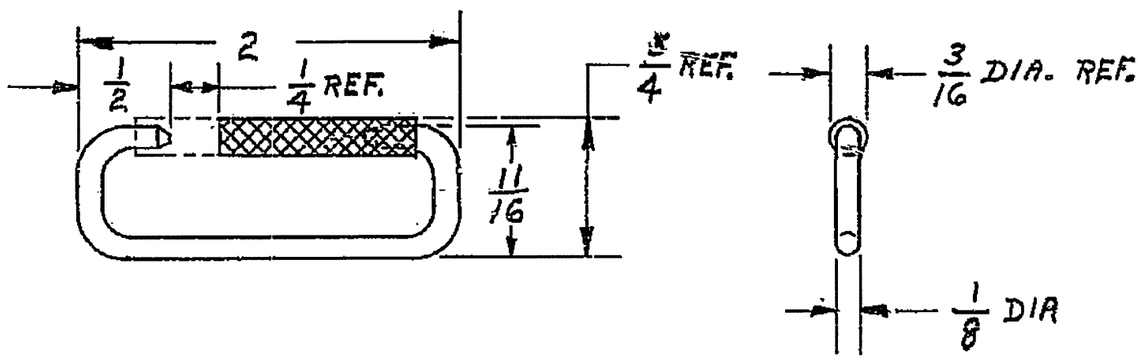

NOTES:

1. MAT'L – LOOP – C1008 BRIGHT BASIC WIRE COMMERCIAL NICKEL PLATED. SLEEVE – C-1008 C.R. STEEL TEMP. #5 COMMERCIAL NICKEL PLATED SPRING – MUSIC WIRE
2. SUGGESTED SOURCE OF SUPPLY
   GOLE NATIONAL CORP.
   5777 GRANT AVE
   CLEVELAND, OHIO
   PART NO. 3319

SPECIFICATION CONTROL DWG.

INTERPRET DRAWING IN ACCORDANCE WITH STANDARDS PRESCRIBED BY MIL-D-1000

UNLESS OTHERWISE SPECIFIED DIMENSIONS ARE IN INCHES TOLERANCES: DECIMALS ± ~ FRACTIONS ± 1/64	APPROVALS DRAWN G. HOSBROOK DATE 8-12-68 CHECKED [illegible] DATE 8/13/68	THE NATIONAL CASH REGISTER COMPANY MILITARY EQUIPMENT / MAIN & K STREETS DAYTON, OHIO 45409
MATL SEE NOTE #1	PROJECT IDENT AN/URT-33 RELEASED DATE [illegible] 10/28/68	RING - ATLAS KEY, SLIP SLEEVE (LANYARD)
HARD / CASE DEPTH SUR TREAT	APPROVED [illegible] DATE KFB 28 Oct 68 APPROVED [illegible] 10/28/68 DATE	SIZE A / CODE IDENT NO. 42470 / 81 000 038
		SCALE FULL / WT. / SHEET 1

X-1050-26 9-24-65 NCR

54267