APPLICATION		REVISIONS			
NEXT ASSY	USED ON	REV	DESCRIPTION	DATE	APPROVED

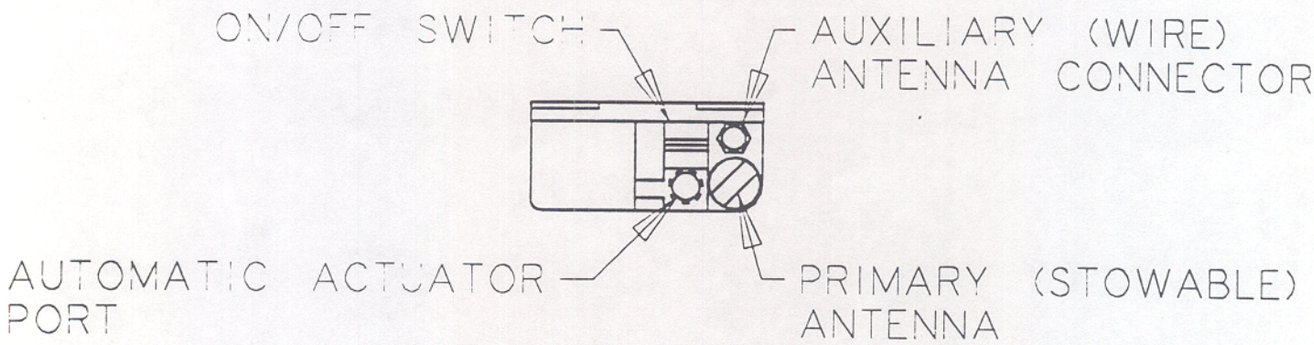

COMPUTER GENERATED DRAWING

REV STATUS OF SHEETS	REV																				
	SHEET	2	3	4	5	6	7	8	9	10	11	12	13	14	15	16	17	18	19	20	21

INTERPRET DRAWING IN ACCORDANCE WITH MIL-STD-100

DIMENSIONS ARE IN INCHES

UNLESS OTHERWISE SPECIFIED, TOLERANCES ARE:
3 PLACE DECIMALS ±
2 PLACE DECIMALS ±
ANGLES ±

PROJ ENGR
ENGINEER
CHECKED
PREPARED

EMERGENCY LOCATOR TRANSMITTER, AN/URT-33A

MATL ENGR
QA ENGR
CMPNT ENGR

APPROVED FOR THE COMMAND
_____ 19____

SIZE A | CAGE CODE 30003 | DRAWING NO.

SCALE 1/2 | SHEET 1 OF 2

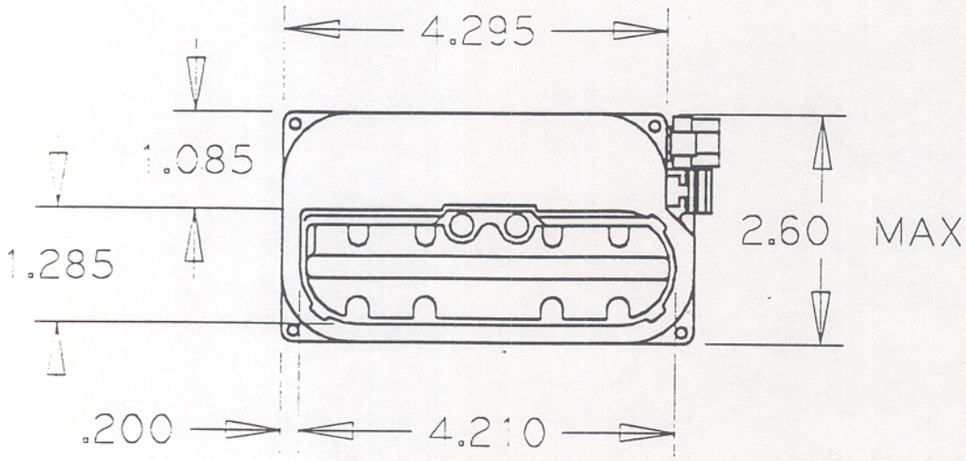

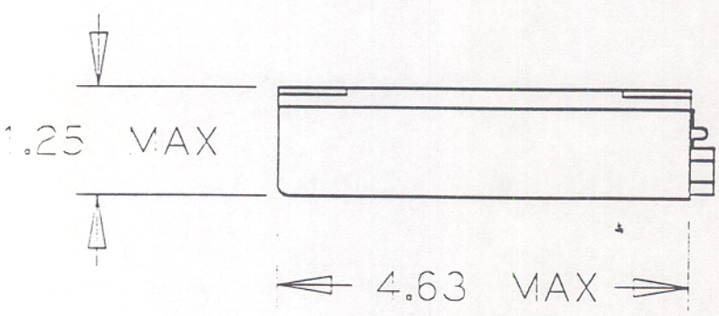

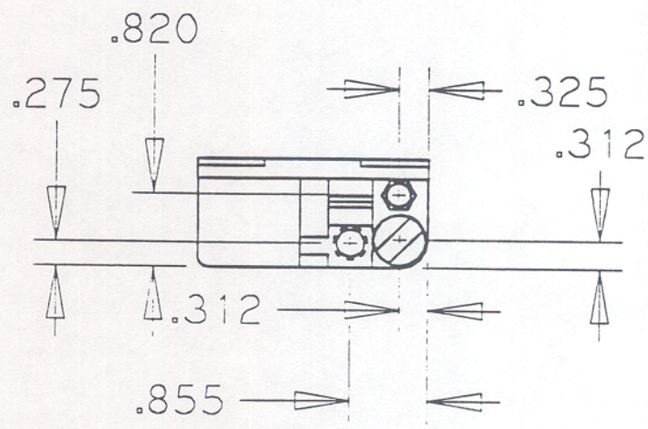

SIZE	CAGE CODE	DRAWING NO.
A		
SCALE 1/2	REV	SHEET 2