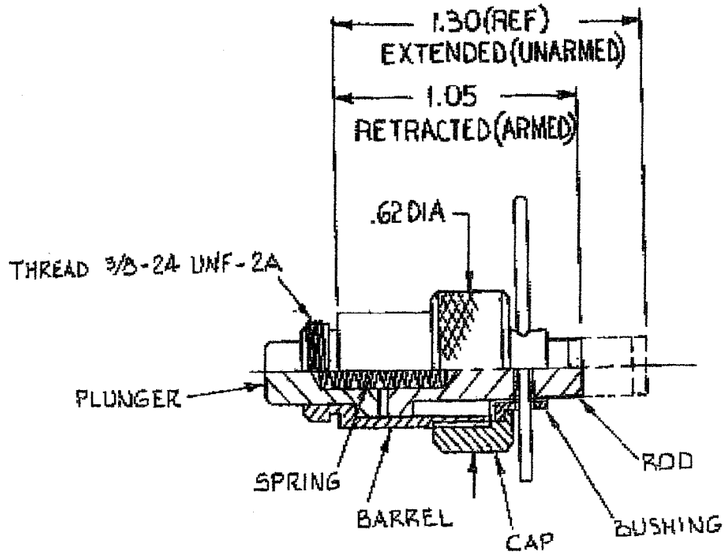

-1 ASSY

125 B 300

EASTWEST RESERVES ALL PATENT RIGHTS THERETO AND TO ANY ARTICLE DISCLOSED HEREIN, EXCEPT TO THE EXTENT RIGHTS HAVE BEEN GRANTED TO OTHERS.

REVISIONS

SYM.	DESCRIPTION	CHANGED BY	CHECK	APPVD.
–	RELEASED FOR PROVISIONING	J.H. 9-7-93	9-3-93	9/7/93

	~	-1	ACTUATOR, MINI, ASSEMBLY					
NEXT ASSY	NO. REQ'D PER ASSY	PART NO.	DESCRIPTION	DIA/THK	WIDTH	LENGTH	MATERIAL	MAT'L SPEC
				STOCK SIZE				

LIST OF MATERIAL

UNLESS OTHERWISE NOTED DIMENSIONS ARE IN INCHES	DRAWN ALI MOGHADASI	DATE 3-5-85	EAST/WEST LONG ISLAND, N.Y.
DEC TOL	CHECKED R. BURKHARD	3-5-85	
2 PLACE ± ~			
3 PLACE ± ~	PROJ ENGR R. BURKHARD	3-5-85	ACTUATOR, MINI, ASSEMBLY AN/URT-33 SERIES RADIO BEACON
ANGULAR ± ~			
ALL DIMENSIONS AFTER PROCESSING	APPROVED F. KNOLL	3-7-85	
REMOVE ALL BURRS AND BREAK SHARP EDGES .010 X 45° MAX			
ALL SURFACES TO BE RMS PER ASA B46 ✓~			SIZE B / CODE IDENT NO. 30941 / 125 B 300 P / REV ~
THREADS – MIL-S-7742 CL2 (A OR B)	CONTRACT NO		SCALE 2/1 / DATE 3-7-85 / SHEET 1 OF 1
DO NOT SCALE DRAWING			