Additive Manufacturing Roadmap and Key Initiatives

July 24, 2014

Presented to:

NAVAIR AM Industry Day

Presented by:

Elizabeth McMichael

NAVAIR AM IPT Lead

NAVAIR Public Release 2014-637
Distribution Statement A – Approved for public release; distribution is unlimited

NAVAIR Transformative Goals

- Manufacture and qualify a Flight Critical Component at an FRC with minimal "touch labor"
- Make AM the preferred process for making tools at the FRCs
- Buy AM parts and tooling from DLA and NAVICP
- Manufacture and qualify a flight worthy AM "meta-material" integrating structural and sensor components
- Produce and qualify a rotating component with PHM-capable embedded sensors
- Build an AM printed explosive train with initiating, booster/timing, and main charge elements
- Development cost estimating methodology and should-cost for AM.
- Establish a NAVAIR AM capability for training, prototyping, process development, and standardization of AM.

Execute change necessary to rapidly leverage additive manufacturing for delivery of warfighter capability.

Manufacture and qualify a flight critical, non-proprietary component at an FRC with minimal "touch" labor using additive manufacturing.

Manufacture explosive train using additive manufacturing.

COMMAND LOCATIONS

8 MAJOR SITES	$38.4B* MANAGED	~35,000 PEOPLE
33 PMAs	3,899 AIRCRAFT	11,463 ENGINES

NAWCWD
WEST COAST HUB

- AIR-TO-AIR WEAPONS
- AIR-TO-GROUND WEAPONS
- MISSILES / FREEFALL WEAPONS
- ENERGETICS
- ELECTRONIC WARFARE SYSTEMS
- LAND AND SEA RANGES
- LIVE FIRE TESTING
- SYSTEM INTEGRATION
- PLATFORM / WEAPON INTEGRATION
- SYSTEM OF SYSTEMS (5TH GEN)

NAVAIR AM IPT
Across NAVAIR

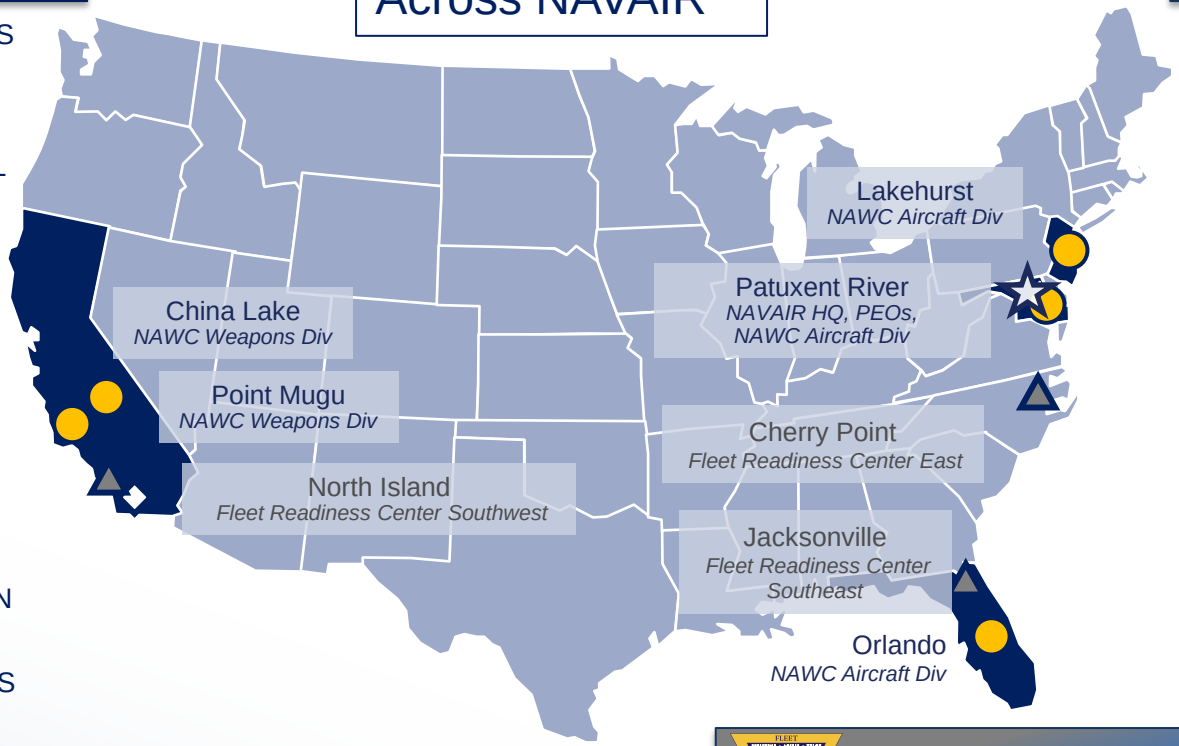

Atsugi, Japan
Fleet Readiness Center

NAWCAD
EAST COAST HUB

- AIR VEHICLES
- PROPULSION AND POWER
- AVIONICS AND SENSORS
- CREW SYSTEMS
- AIRCRAFT LAUNCH AND RECOVERY EQUIPMENT / SUPPORT EQUIPMENT
- SHIP INTERFACE AND SUPPORT SYSTEMS
- HUMAN PERFORMANCE / SIMULATOR SYSTEMS
- TRAINING SYSTEMS
- PLATFORM / STORE INTEGRATION
- FLIGHT TESTING
- TEST RANGE
- PLATFORM MODIFICATIONS

COMFRC
FLEET READINESS CENTERS

- INSERVICE ENGINEERING AND LOGISTICS SUPPORT
- AIR LAUNCH AND RECOVERY REPAIRS
- DEPOT LEVEL MAINTENANCE AND REPAIR (AIRFRAME, ENGINES, COMPONENTS AND SUPPORT EQUIPMENT)
- INTERMEDIATE LEVEL MAINTENANCE

NAVAIR HQ
Depot / Industrial Site (Fleet Readiness Centers)
Naval Air Warfare Center
Logistic Support Activity

Distribution Statement A – Approved for public release; distribution is unlimited

* DOES NOT INCLUDE USAF JSF DIRECT CITE FUNDS SENT TO NAVAIR HQ (~$4.4B IN FY2011)

DATA AS OF 7 JUN 2013

NAVAIR

NAVAIR Additive Manufacturing Initiatives

#1 - Field AM Parts

Initiative #1 Projects

- Casting Replacements
- Structural Repair/Replacement
- ALRE/SE Components
- AM Tooling Process Standard
- Weapons and Energetics
- Complex Engine Components
- ⋮
- Industry/DoD/Other

Candidate Parts

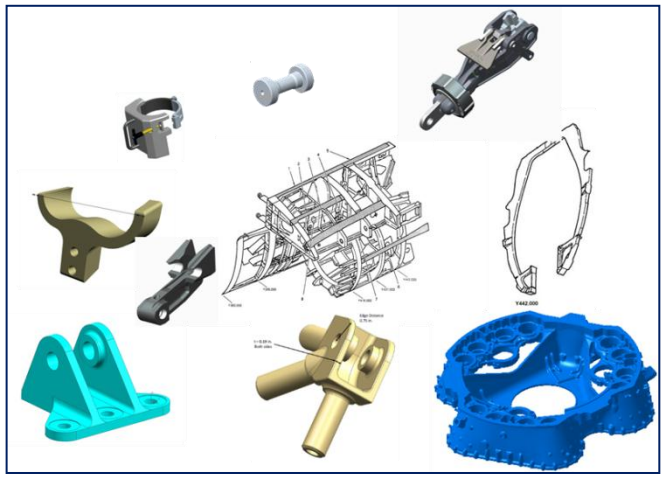

#2 – Demonstrate Rapid Qualification/Certification

Initiative #2 Projects

- Material and Process Qualification
- Structural Analysis and Structural Certification
- Non-Destructive Inspection Methods
- Innovative Process Models
- ⋮
- Industry/DoD/Other

NAVAIR Additive Manufacturing Initiatives

3 – Utilize "Digital Thread" across NAE

Initiative #3 Projects

- 3D/Model Based Environment
- 3D Modeling and AM Digital Environment
- AM Data Architecture/Standards
- AM Build Package Development
- ⋮
- Industry/DoD/Other

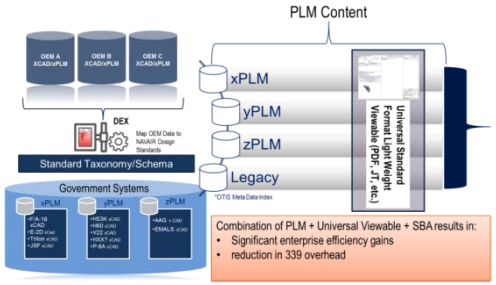

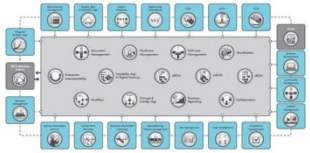

Integrated Qual/Cert/TDP IT Architecture

4 – Update Business and Acquisition Processes

Initiative #4 Projects

- NAVSUP and DLA Supply Chain
- Cost Modeling and ROI
- ⋮
- Industry/DoD/Other

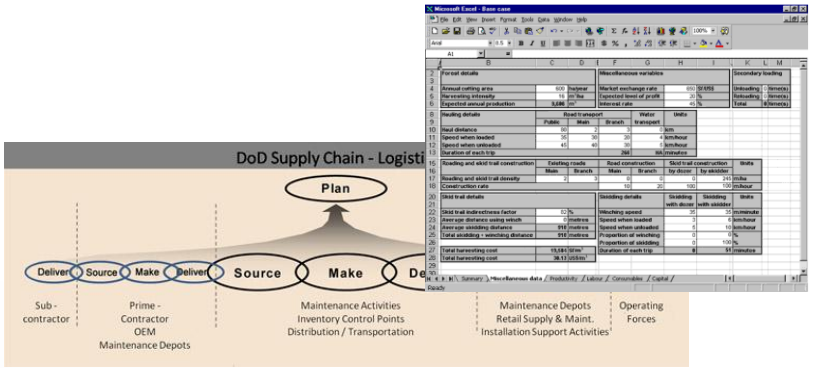

AM Roadmap Project

Casting Replacement

Near Term

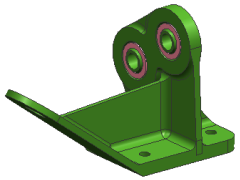

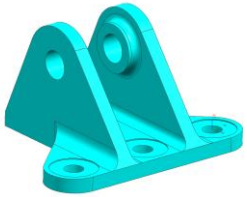

Mid Term

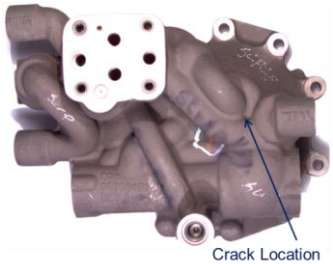

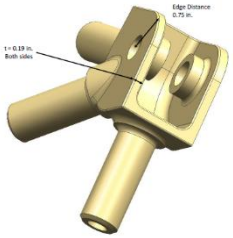

Long Term

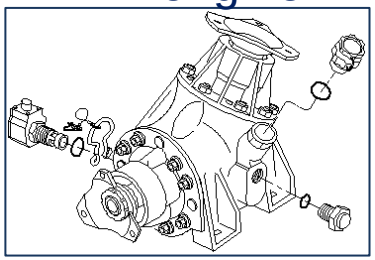

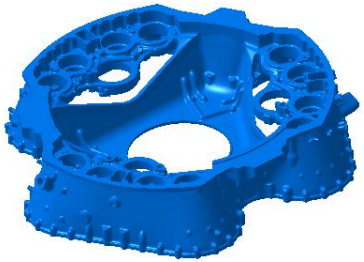

Task	FY-15												FY-16												FY-17												FY-18											
	1ST QTR			2ND QTR			3RD QTR			4TH QTR			1ST QTR			2ND QTR			3RD QTR			4TH QTR			1ST QTR			2ND QTR			3RD QTR			4TH QTR			1ST QTR			2ND QTR			3RD QTR			4TH QTR		
	O	N	D	J	F	M	A	M	J	J	A	S	O	N	D	J	F	M	A	M	J	J	A	S	O	N	D	J	F	M	A	M	J	J	A	S	O	N	D	J	F	M	A	M	J	J	A	S
AM Process/NDI/Post Process Spec																																																
AM Materials Database																																																
Engineering Analysis																																																
NDI																																																
Build Package/TDP																																																
Build-up Demonstrations (NFC)																																																
FRC Demonstrations (FC)																																																
Industry Demonstrations (NFC)																																																
Industry Demonstrations (FC)																																																
FRC Flight Critical Part Manufacture and Installation																																																

Notional Schedule

AM Roadmap Initiatives

Additive Manufacturing Structural Repair/Replacement

Near Term

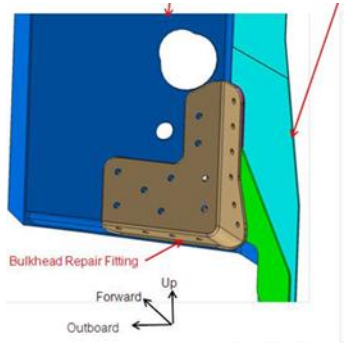

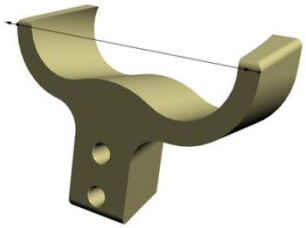

Mid Term

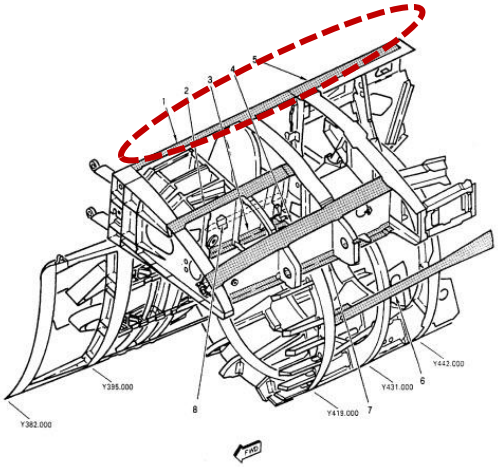

Long Term

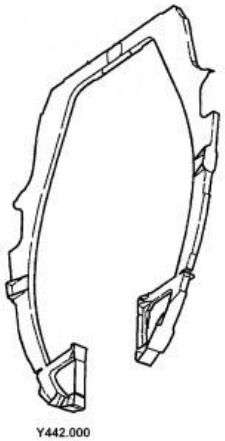

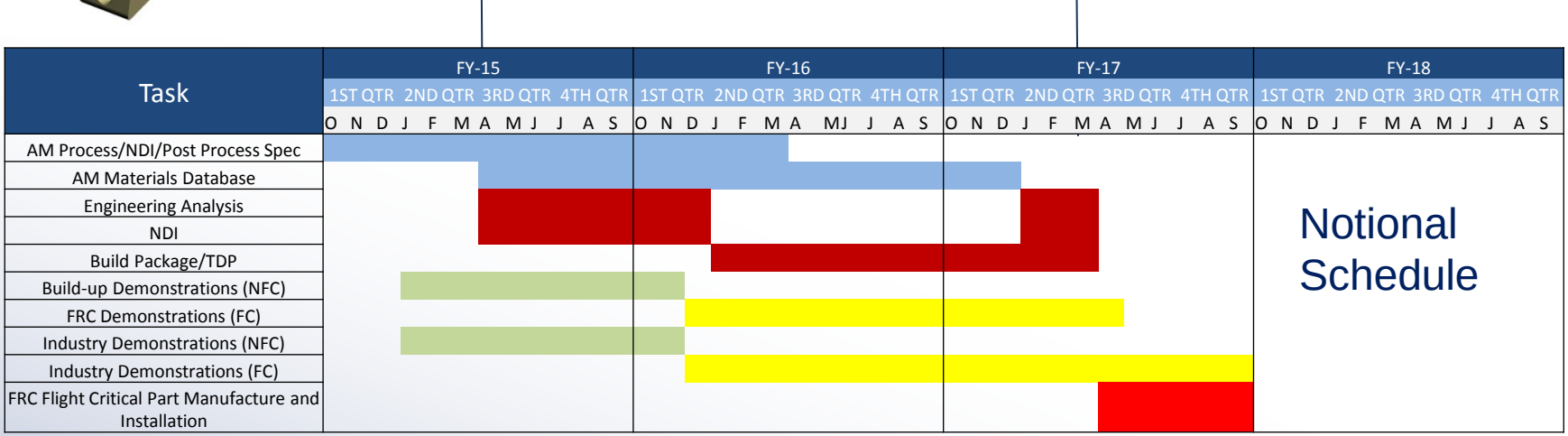

Industry/Academia Partnership and Collaboration

- AM Parts
  - Non-flight critical/flight critical parts
  - AM Enabled Designs
  - Alternative Materials
  - Meta-materials
  - Complex Engine components
- Rapid Qualification/Certification
  - AM material & process standards
  - Process models, controls, and sensors,
  - Process-microstructure-property data generation / management
  - NDI
- “Digital Thread”
  - 3D/MBE/PLM and AM requirements
  - Configuration Management
  - Security
- Business and Acquisition
  - Strategies to enable AM for suppliers
  - Data rights and IP
  - Cost modeling