REVISION HISTORY			
REV	DESCRIPTION	DATE	APPROVAL
C	REVISED AND PARTIALLY REDRAWN BY M. BEUSTER. FORMAT UPDATED.	2006-01-18	R A VOTAW

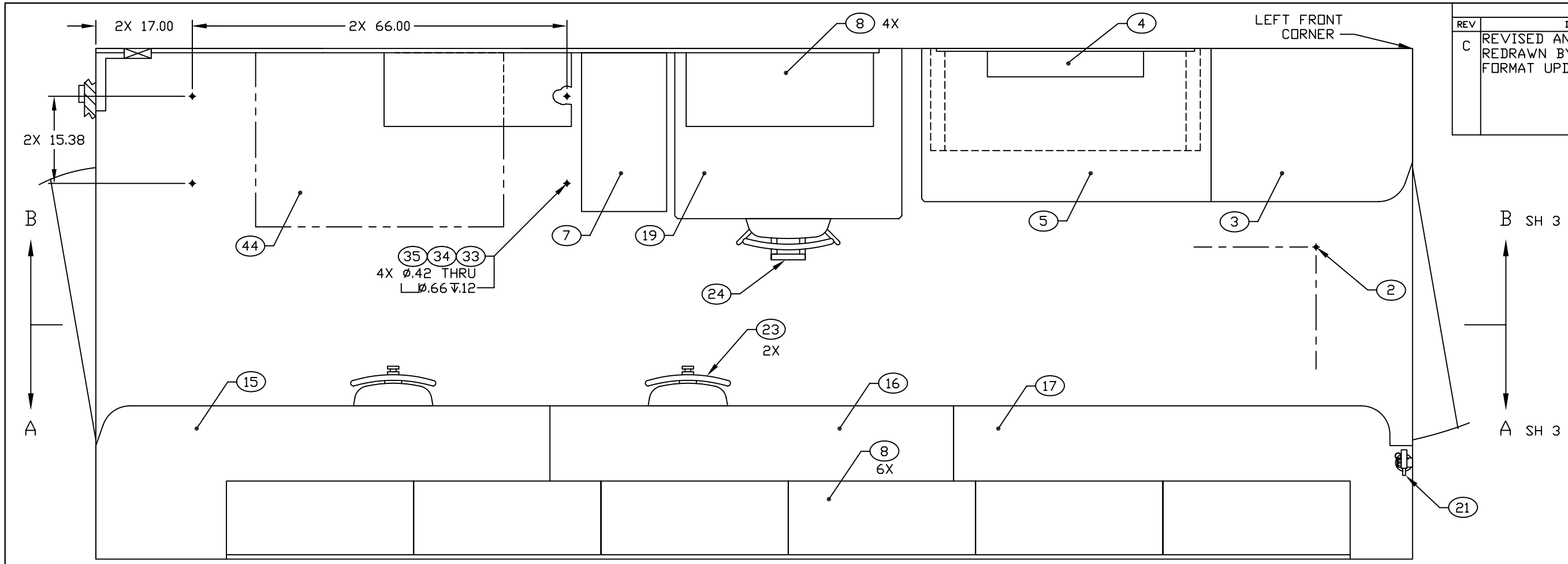

FLOOR PLAN

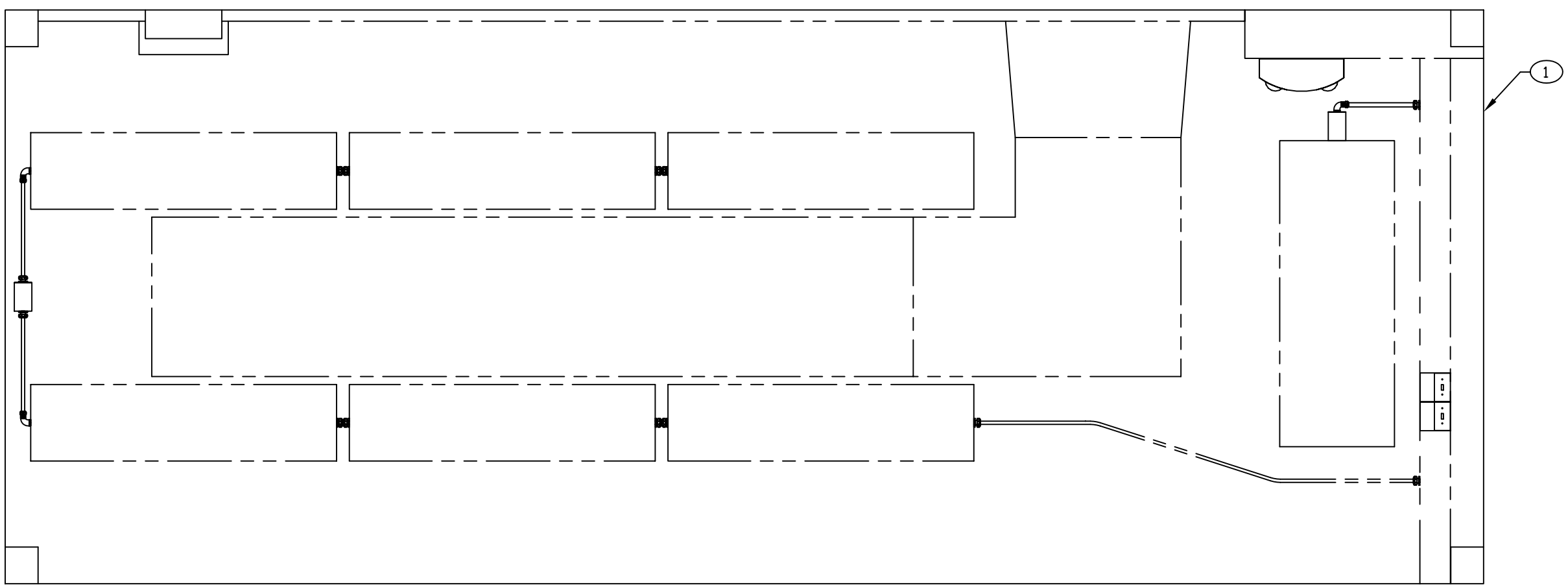

CEILING PLAN

ENGINEER	DATE	DRAWN BY	DATE	SIZE	CAGE CODE	DWG NO	REV
P. VICENCIO	94-01-26	P. VICENCIO	94-01-26	D	91145	MFTA010201	C
NEXT ASSEMBLY	FINAL	CHECKER	MAB	94-02	SCALE 1/10	SH 2	

REVISION HISTORY			
REV	DESCRIPTION	DATE	APPROVAL
C	REVISED AND PARTIALLY REDRAWN BY M. BEUSTER. FORMAT UPDATED.	2006-01-18	R A VOTAW

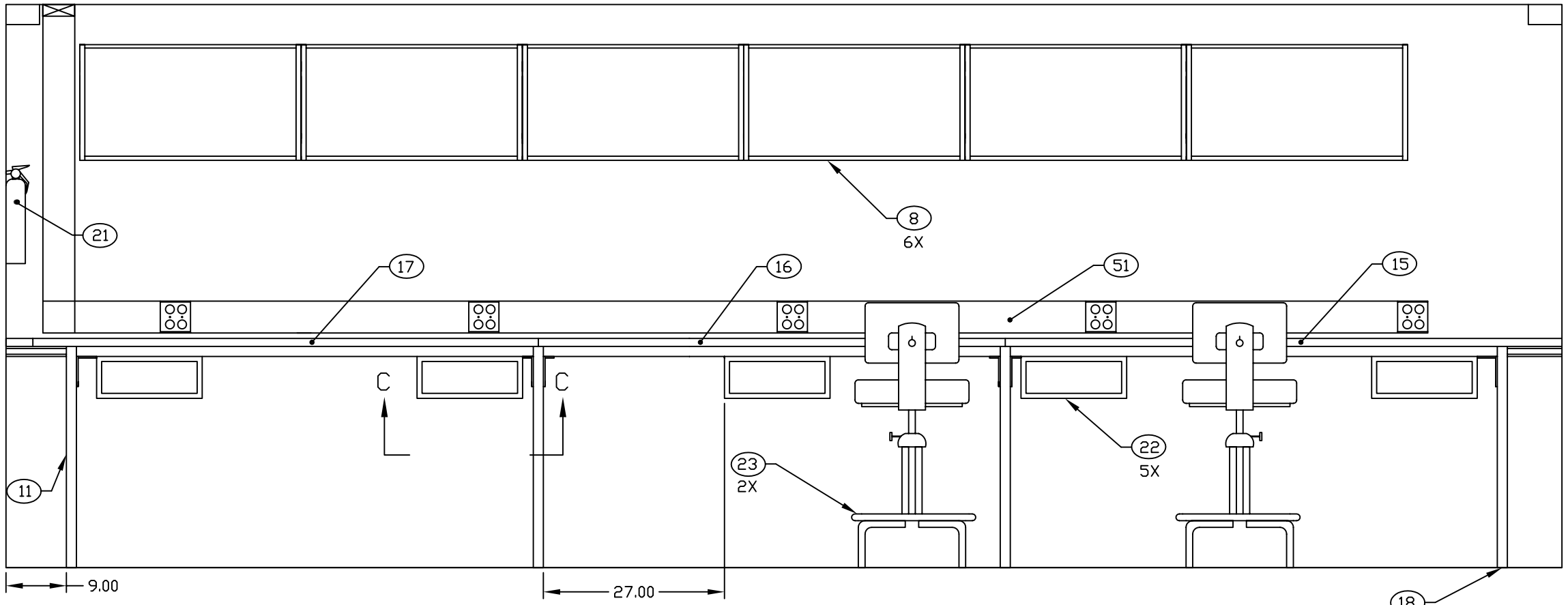

SECTION A-A SH 2
ROTATED 180

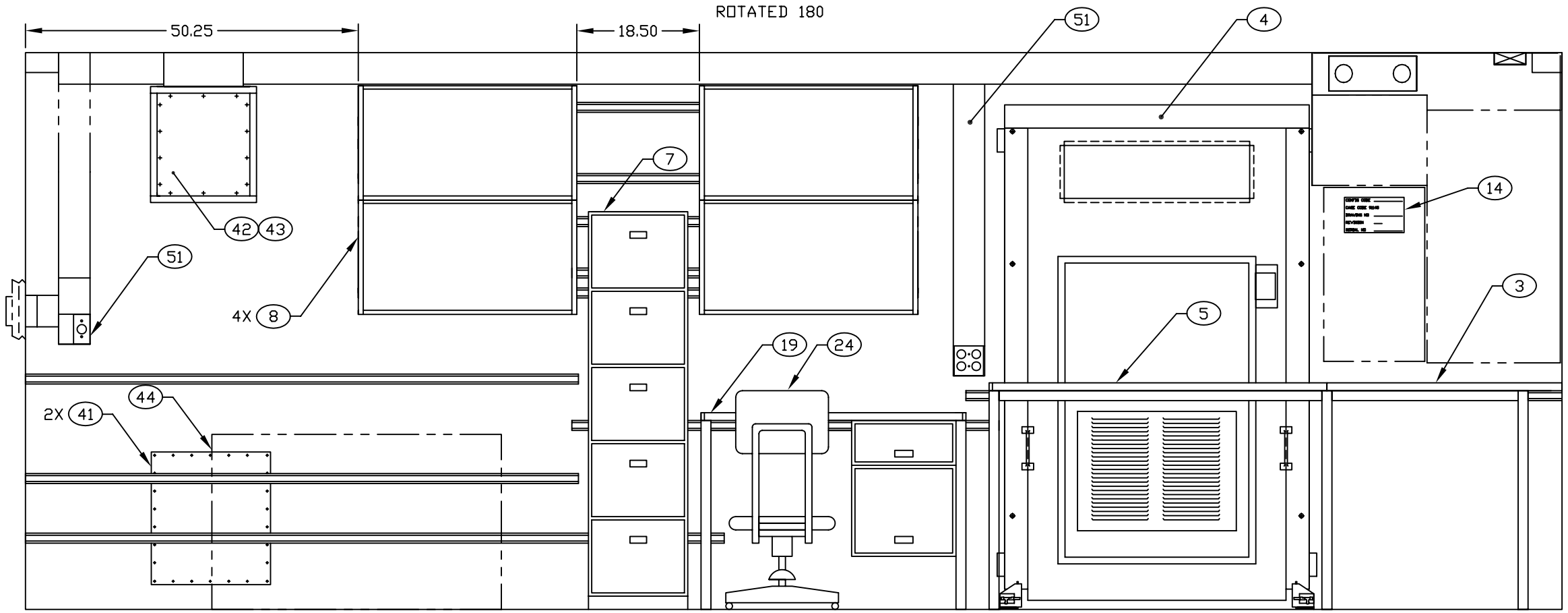

SECTION B-B SH 2

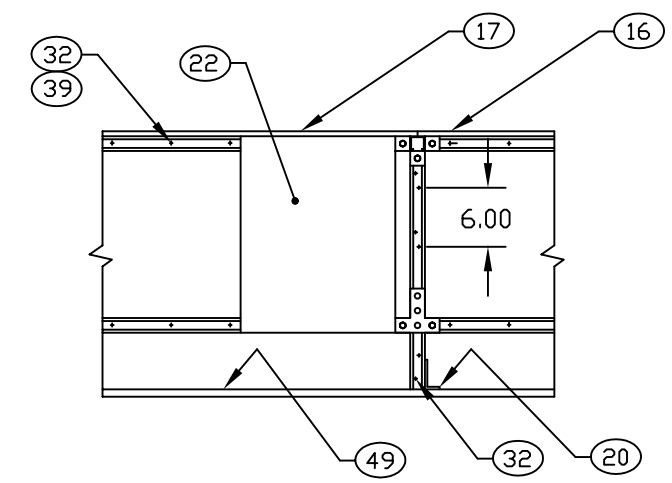

SECTION C-C
TYPICAL COUNTERTOP INSTALLATION

ENGINEER	DATE	DRAWN BY	DATE	SIZE	CAGE CODE	DWG NO	REV
P. VICENCIO	94-01-26	P. VICENCIO	96-04-11	D	91145	MFTA010201	C
NEXT ASSEMBLY	FINAL	CHECKER	MAB	94-02	SCALE	1/10	SH 3