REVISION HISTORY			
REV	DESCRIPTION	DATE	APPROVAL

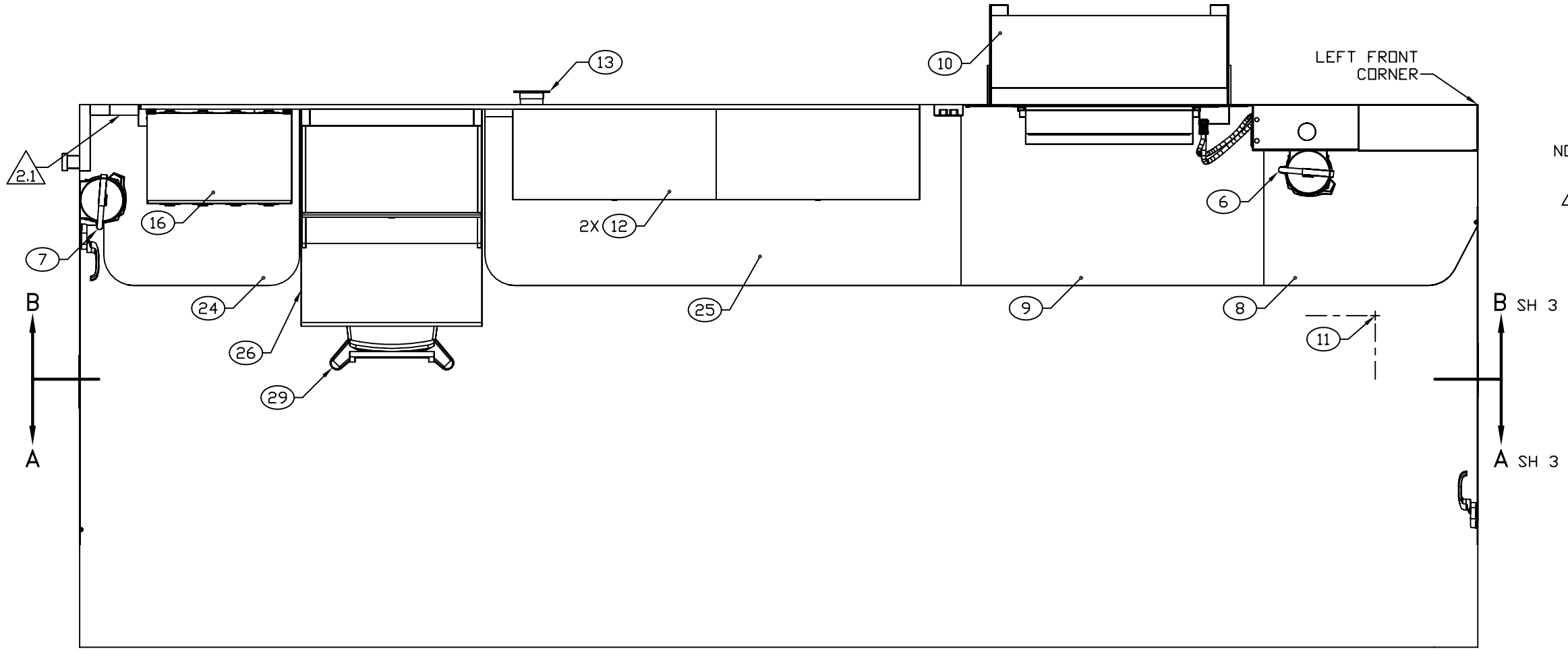

FLOOR PLAN

NOTE:

2.1 CUT COUNTERTOP AT TIME OF INSTALLATION TO ALLOW RACEWAY ACCESS.

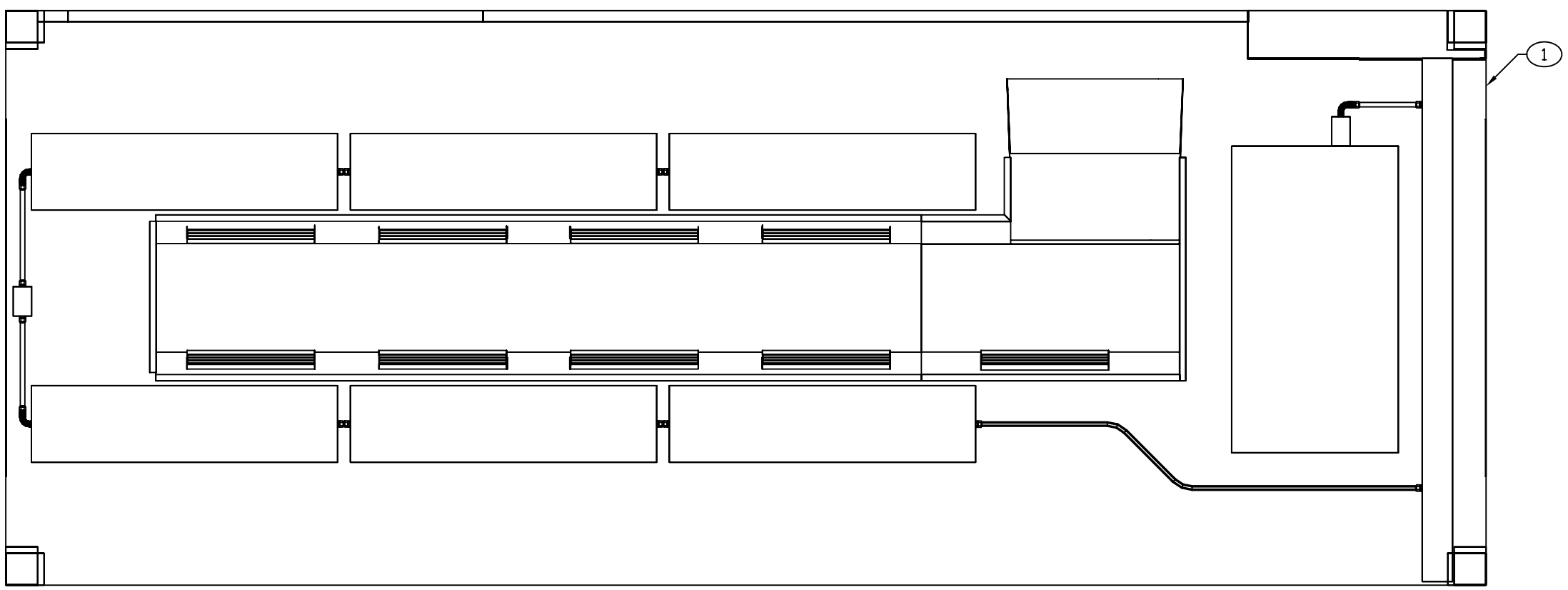

CEILING PLAN

ENGINEER	DATE	DRAWER	DATE	SIZE	CAGE CODE	DRAWING NUMBER	REV
T NGUYEN	02-09-03	TN	02-09-03	D	91145	MFSP020101	–
NEXT ASSEMBLY		CHECKER		SCALE		SHEET	
FINAL		MAB	02-09-04	1/11		2	

REVISION HISTORY			
REV	DESCRIPTION	DATE	APPROVAL
A	REVISED AND PARTIALLY REDRAWN BY P. VICENCIO. (1) ITEM ADDED.	03-05-13	R VOTAW

NOTE:

3.1 REPLACE B-921 TWO SIDE CORNER CONNECTOR OF DRAWING NO MFBFN1086-5 CAGE CODE 91145 WITH FIND NO 30. REUSE EXISTING HARDWARE.

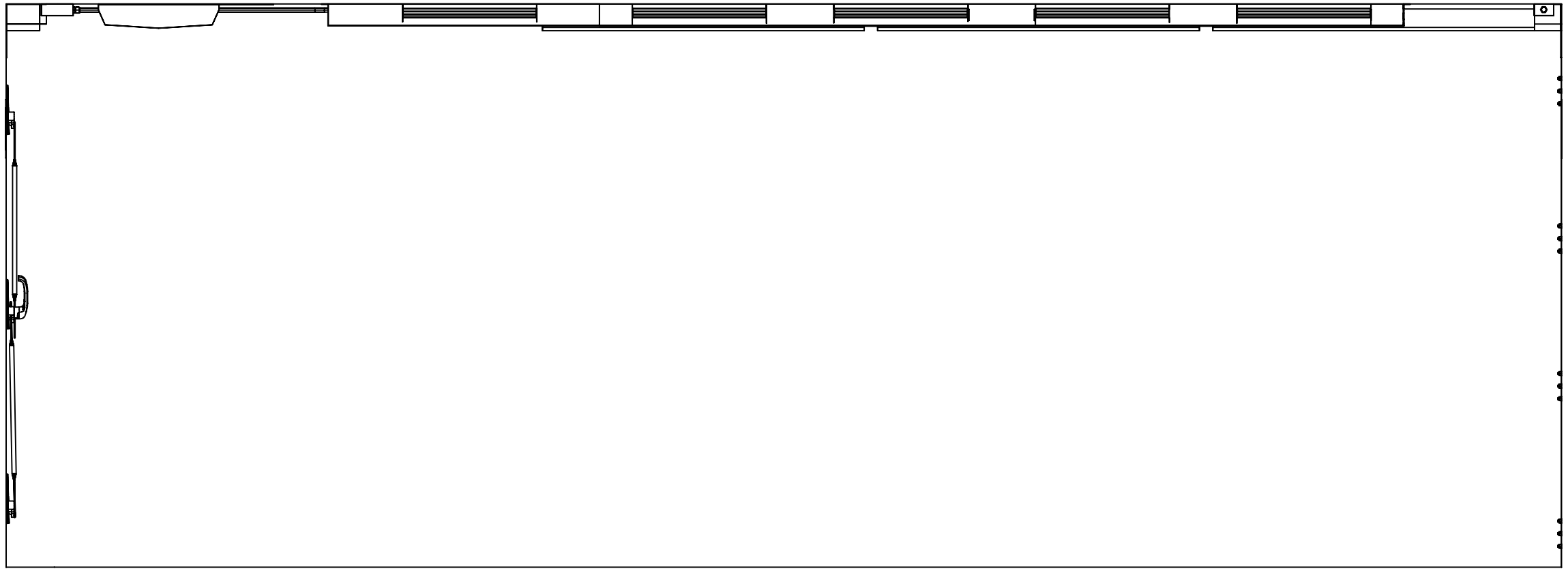

SECTION A–A SH 2
ROTATED 180°

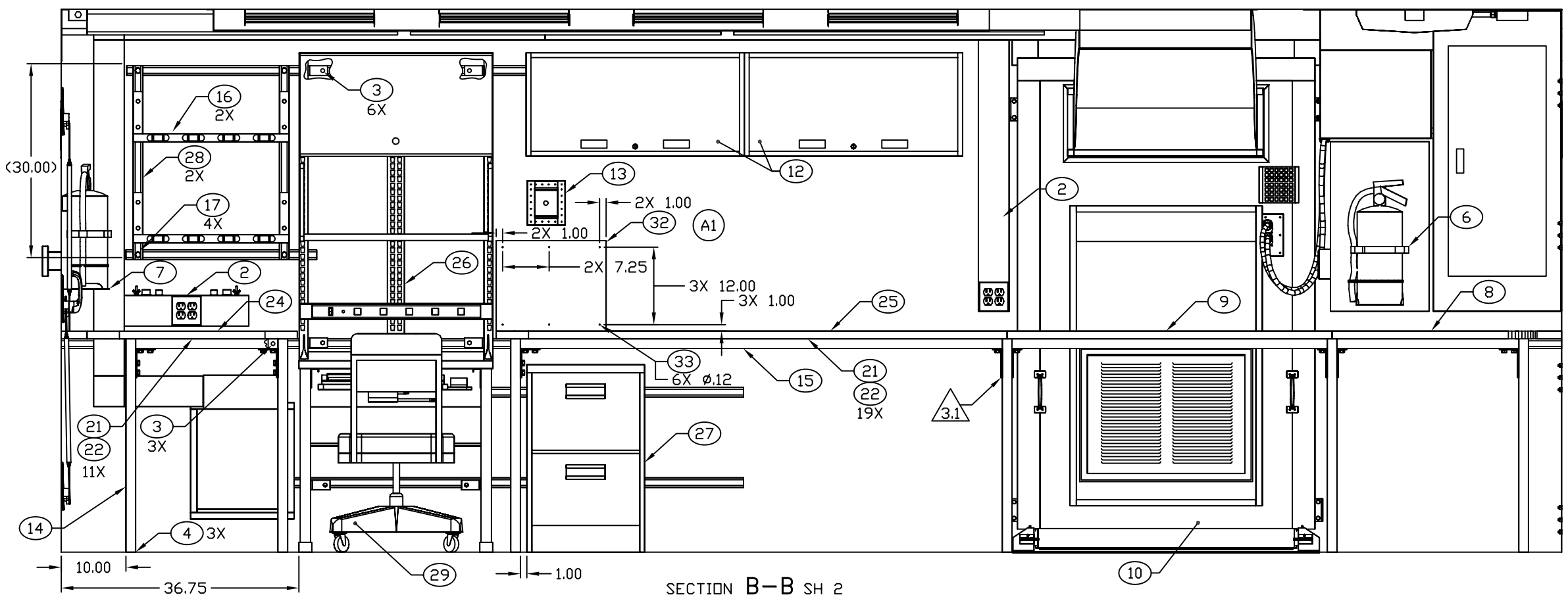

SECTION B–B SH 2

ENGINEER	DATE	DRAWER	DATE	SIZE	CAGE CODE	DRAWING NUMBER	REV
T NGUYEN	02-09-03	TN	02-09-03	D	91145	MFSP020101	A
NEXT ASSEMBLY		CHECKER		SCALE		SHEET	
FINAL		MAB	02-09-04	1/10		3	