REVISION HISTORY			
REV	DESCRIPTION	DATE	APPROVAL

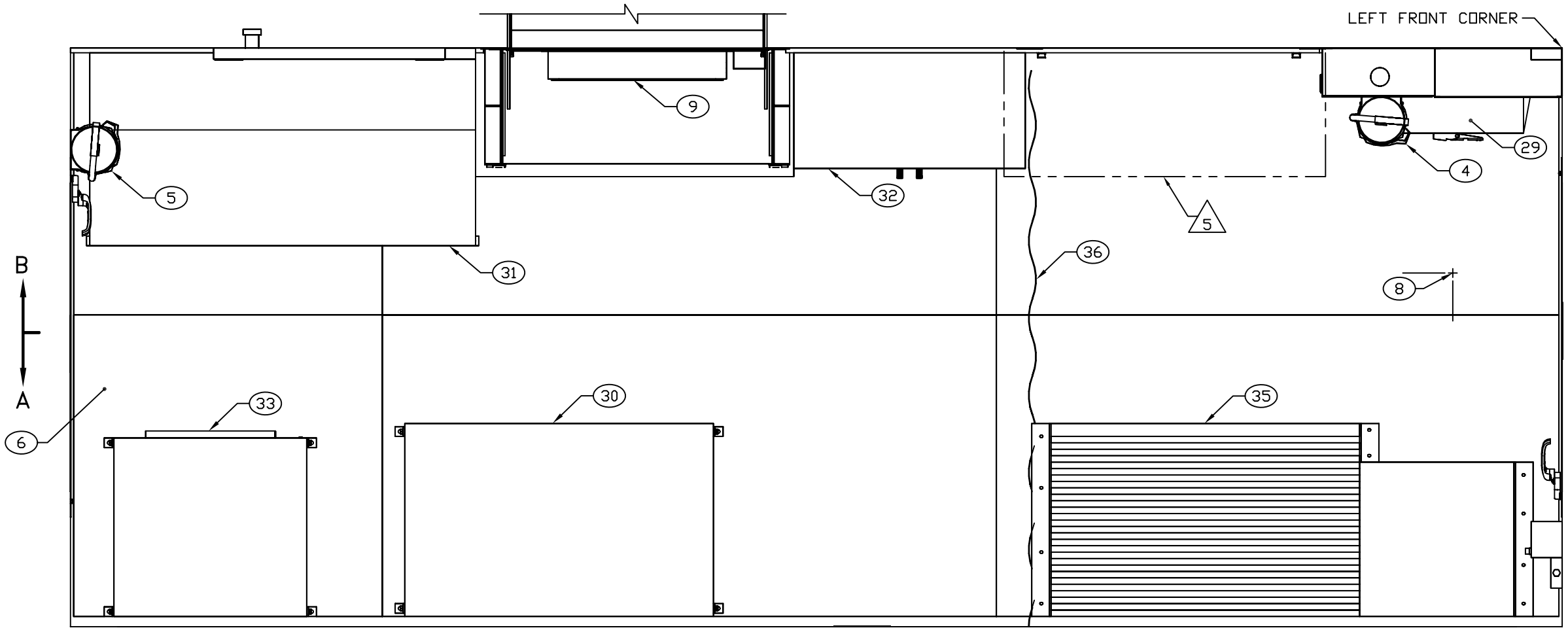

FLOOR PLAN

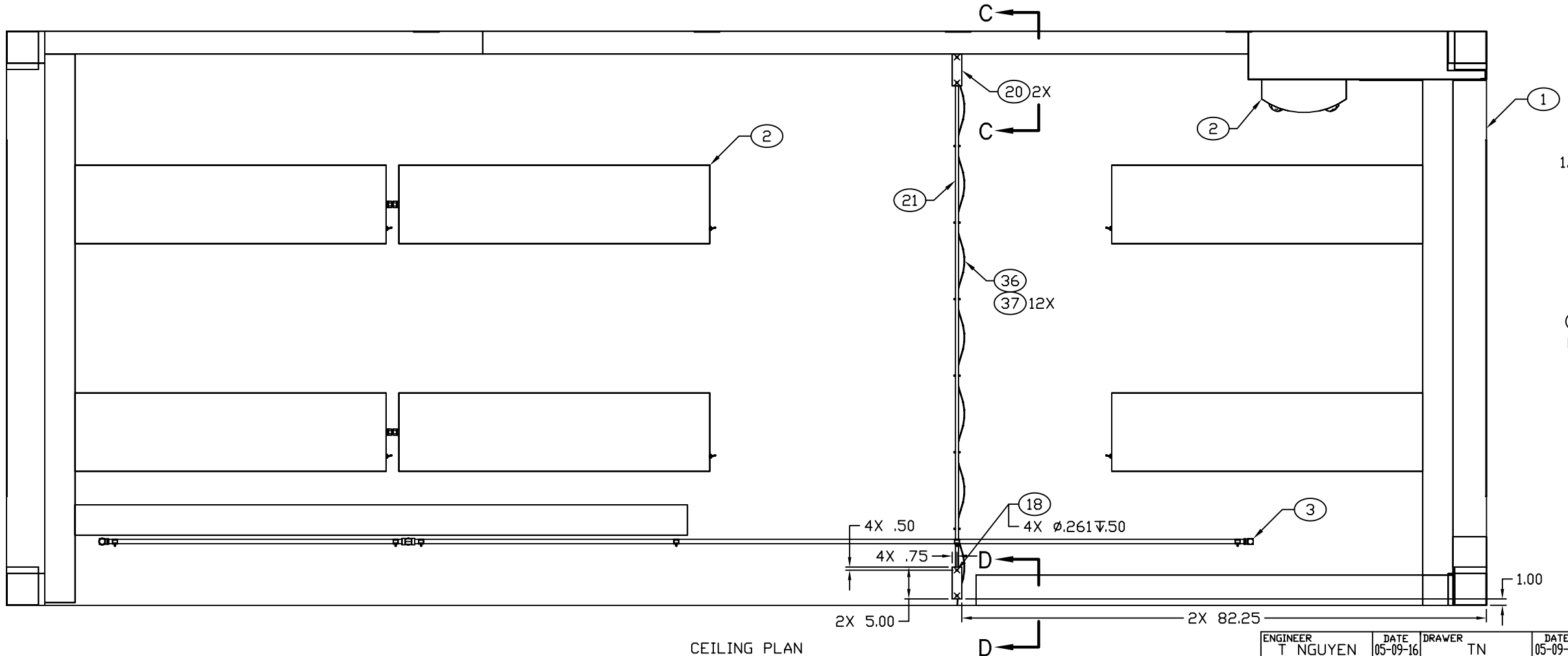

CEILING PLAN

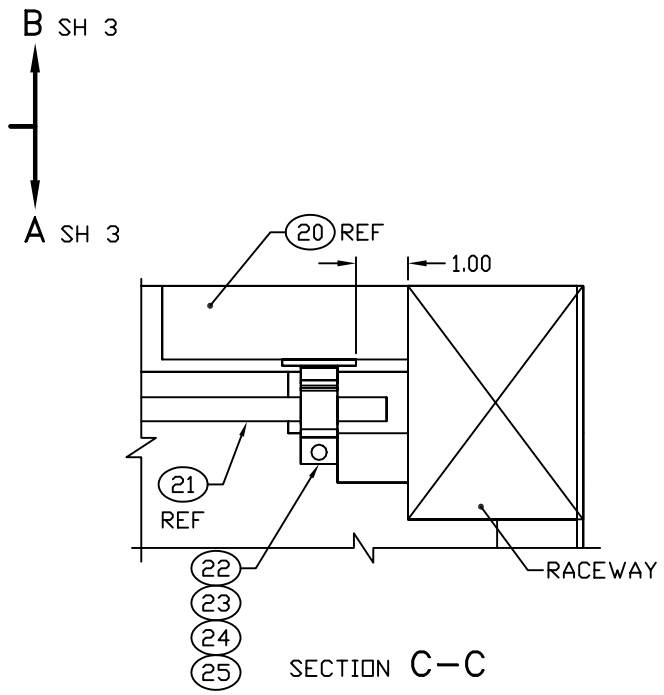

SECTION C–C
ROTATED 90° CW
SCALE 1/2
WELDING CURTAIN NOT SHOWN

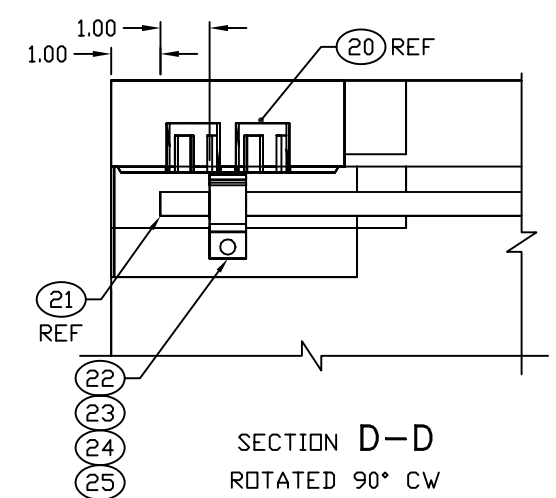

SECTION D–D
ROTATED 90° CW
SCALE 1/2
WELDING CURTAIN AND ELECTRICAL RACEWAY NOT SHOWN

ENGINEER	DATE	DRAWER	DATE	SIZE	CAGE CODE	DRAWING NUMBER	REV
T NGUYEN	05-09-16	TN	05-09-16	D	91145	MFNS070101	–
NEXT ASSEMBLY MFNS080101		CHECKER MAB	05-09-16	SCALE 1/10		SHEET 2	

REVISION HISTORY			
REV	DESCRIPTION	DATE	APPROVAL
B	REVISED AND PARTIALLY REDRAWN BY T H NGUYEN. (1) ITEM ADDED.	06-09-11	R VOTAW

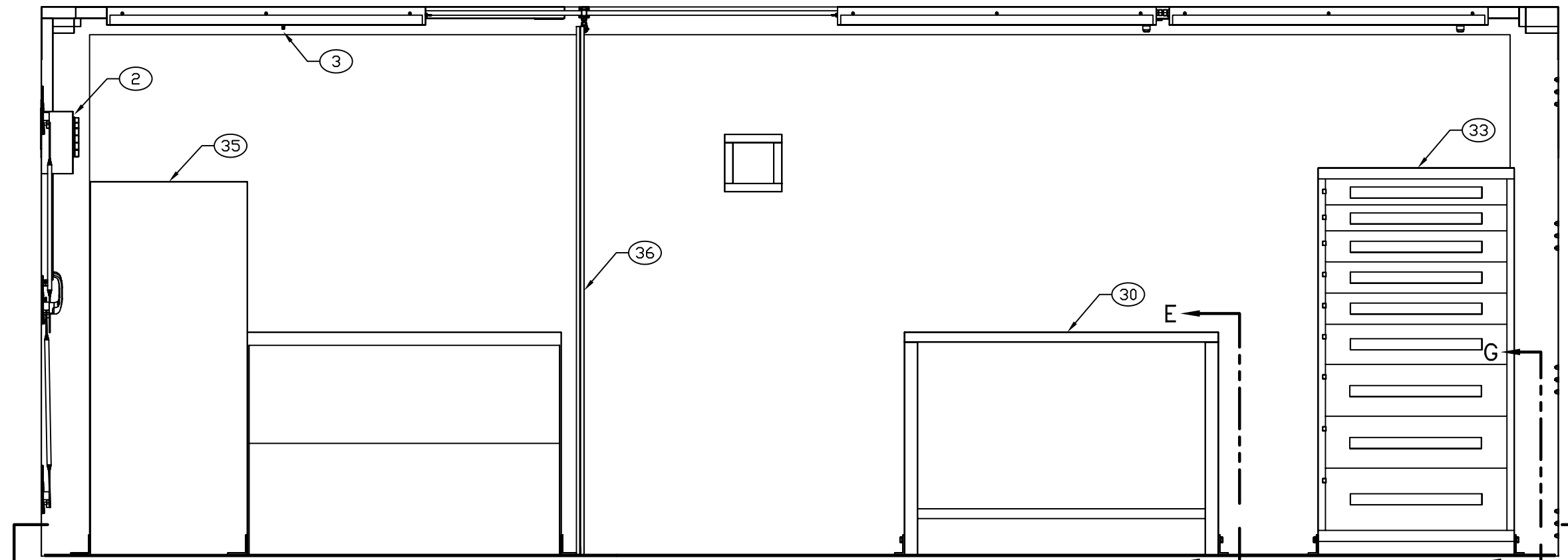

SECTION A–A SHEET 2
ROTATED 180°

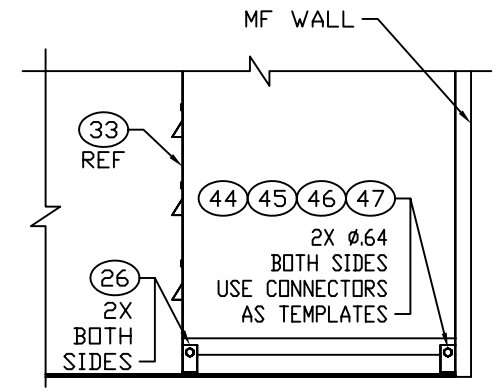

SECTION G–G

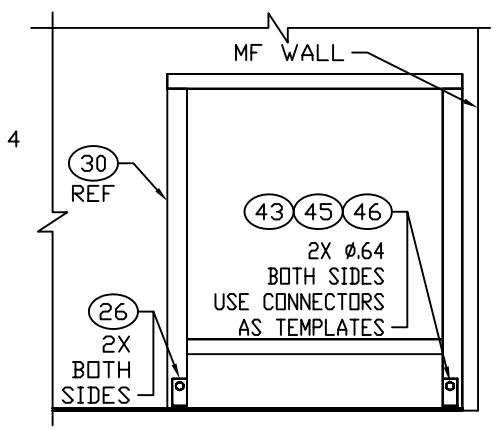

SECTION E–E

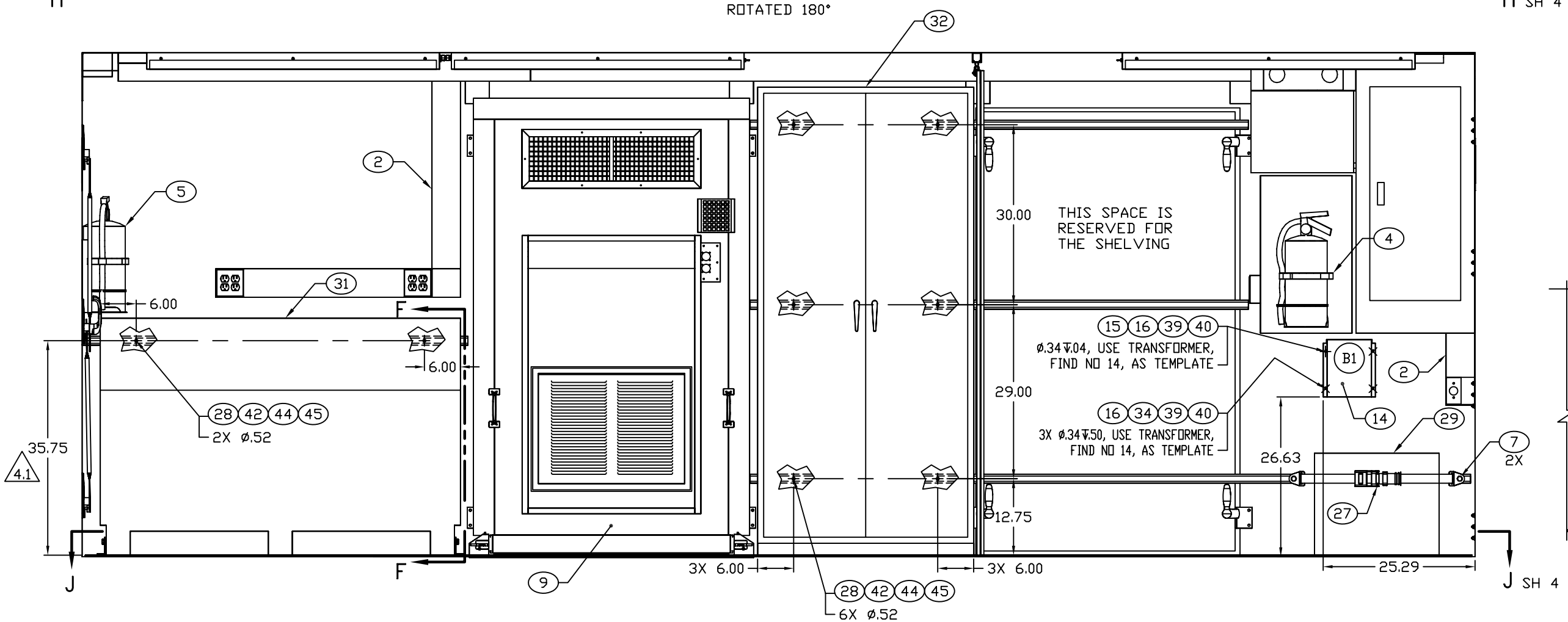

SECTION B–B SHEET 2

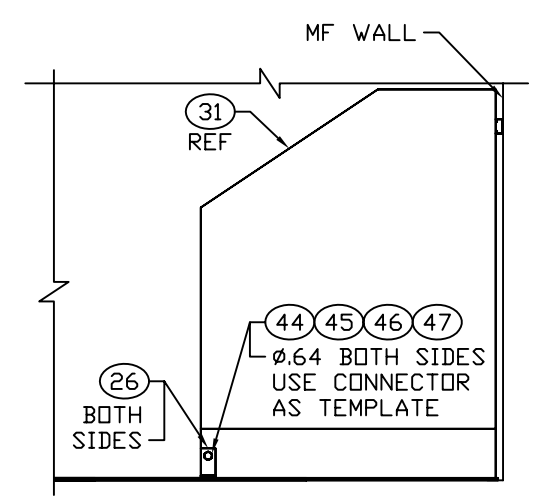

SECTION F–F

ENGINEER	DATE	DRAWER	DATE	SIZE	CAGE CODE	DRAWING NUMBER	REV
T NGUYEN	05-09-16	TN	05-09-16	D	91145	MFNS070101	B
NEXT ASSEMBLY MFNS080101		CHECKER MAB	05-09-16	SCALE 1/10		SHEET 3	