| REVISION HISTORY | | | |
|---|---|---|---|
| REV | DESCRIPTION | DATE | APPROVAL |

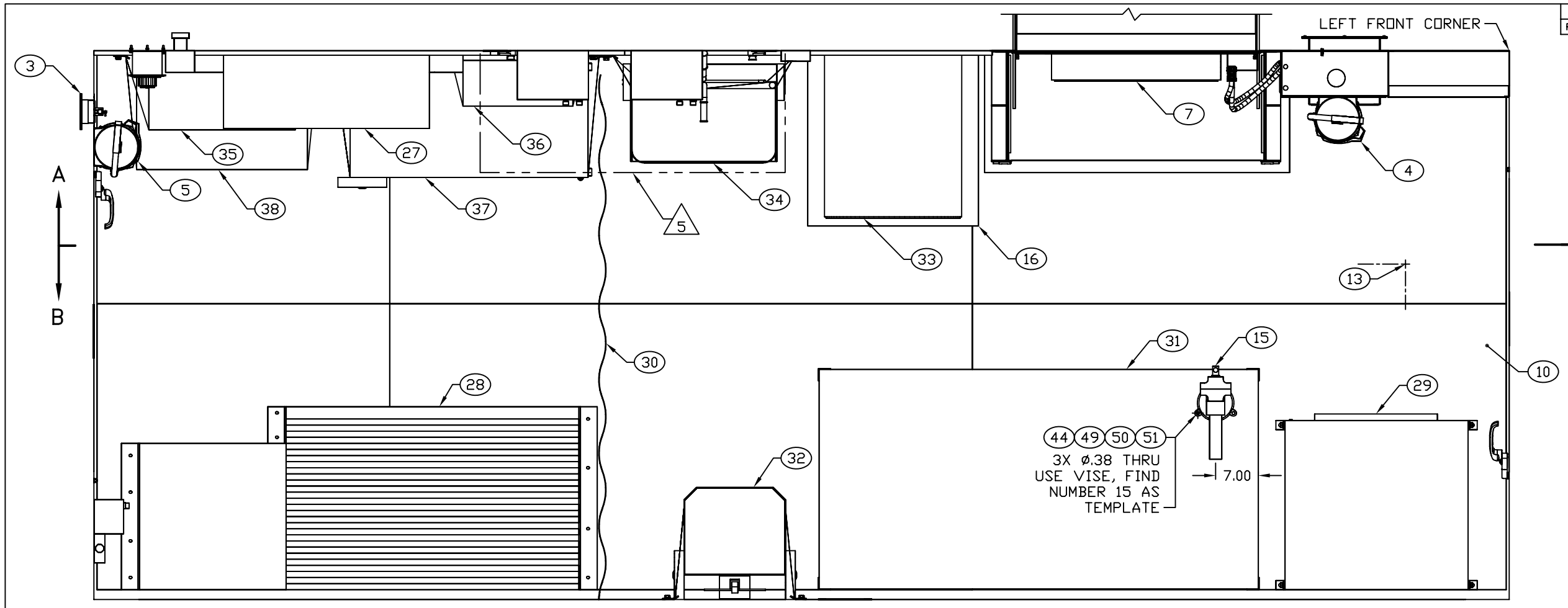


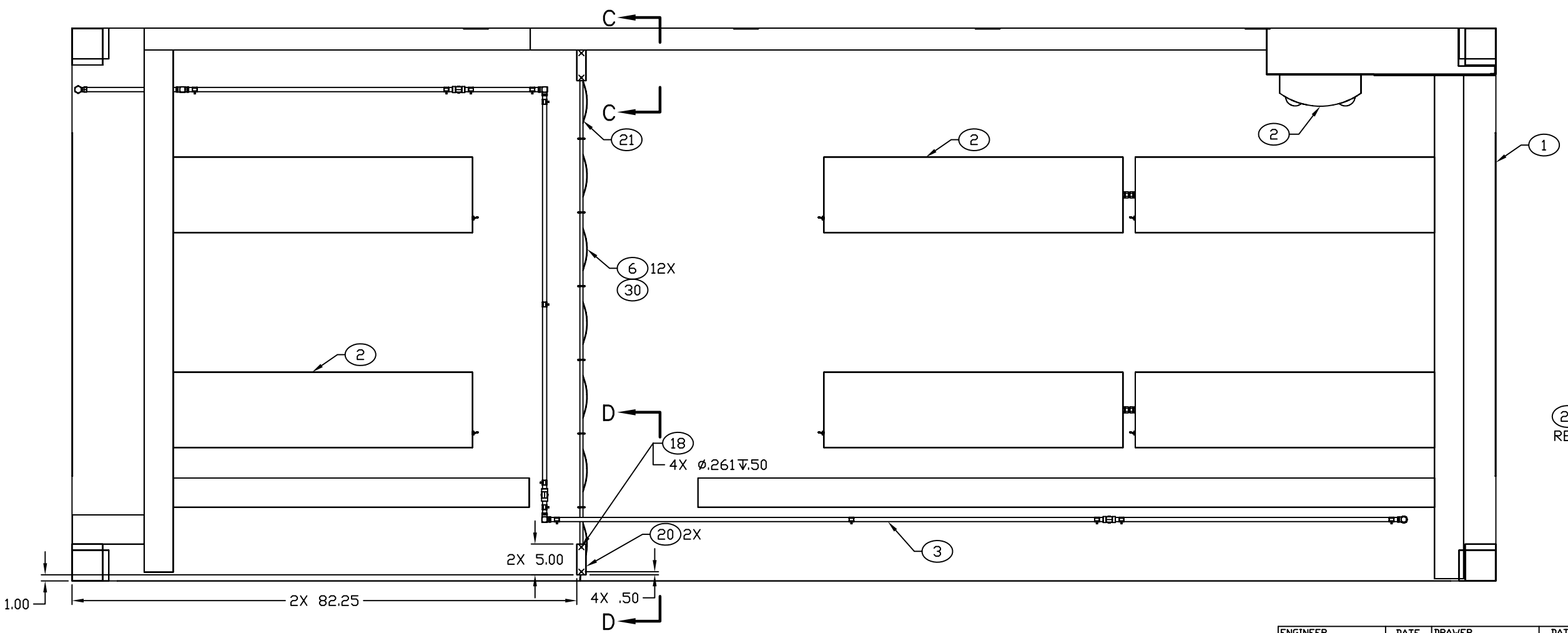


CEILING PLAN

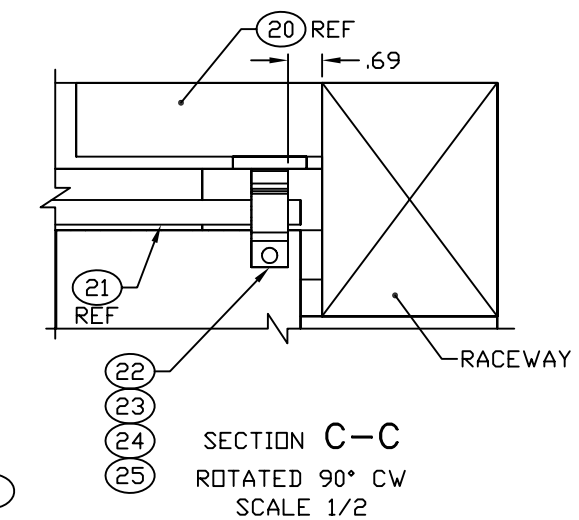


SECTION C–C
ROTATED 90° CW
SCALE 1/2

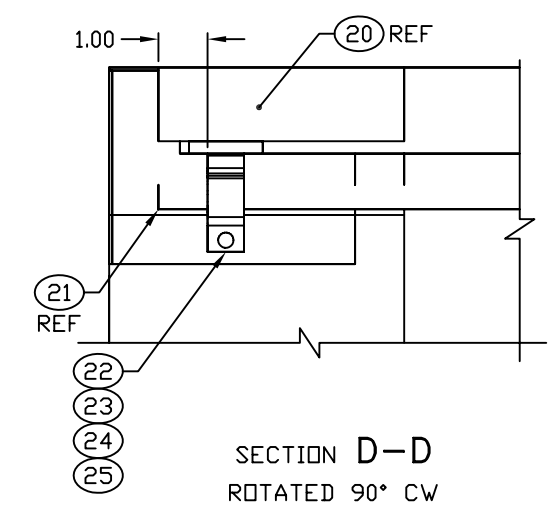


SECTION D–D
ROTATED 90° CW
SCALE 1/2

| ENGINEER | DATE | DRAWER | DATE | SIZE | CAGE CODE | DRAWING NUMBER | REV |
|---|---|---|---|---|---|---|---|
| T NGUYEN | 05-09-16 | TN | 05-09-16 | D | 91145 | MFNS060101 | – |
| NEXT ASSEMBLY MSNS080101 | | CHECKER MAB | 05-09-16 | SCALE 1/10 | | SHEET 2 | |

| REVISION HISTORY | | | |
|---|---|---|---|
| REV | DESCRIPTION | DATE | APPROVAL |
| B | REVISED AND PARTIALLY REDRAWN BY T H NGUYEN. (1) ITEM ADDED. | 06-09-11 | R VOTAW |

NOTE(S):

3.1 3X ø.34 ↧.50, USE TRANSFORMER, FIND NO 56, AS TEMPLATE. INSTALL TRANSFORMER USING FIND NUMBERS 58, 59, 60 AND 61.

3.2 ø.34 ↧.08, USE TRANSFORMER, FIND NO 56, AS TEMPLATE. INSTALL TRANSFORMER USING FIND NUMBERS 57, 58, 60 AND 61.

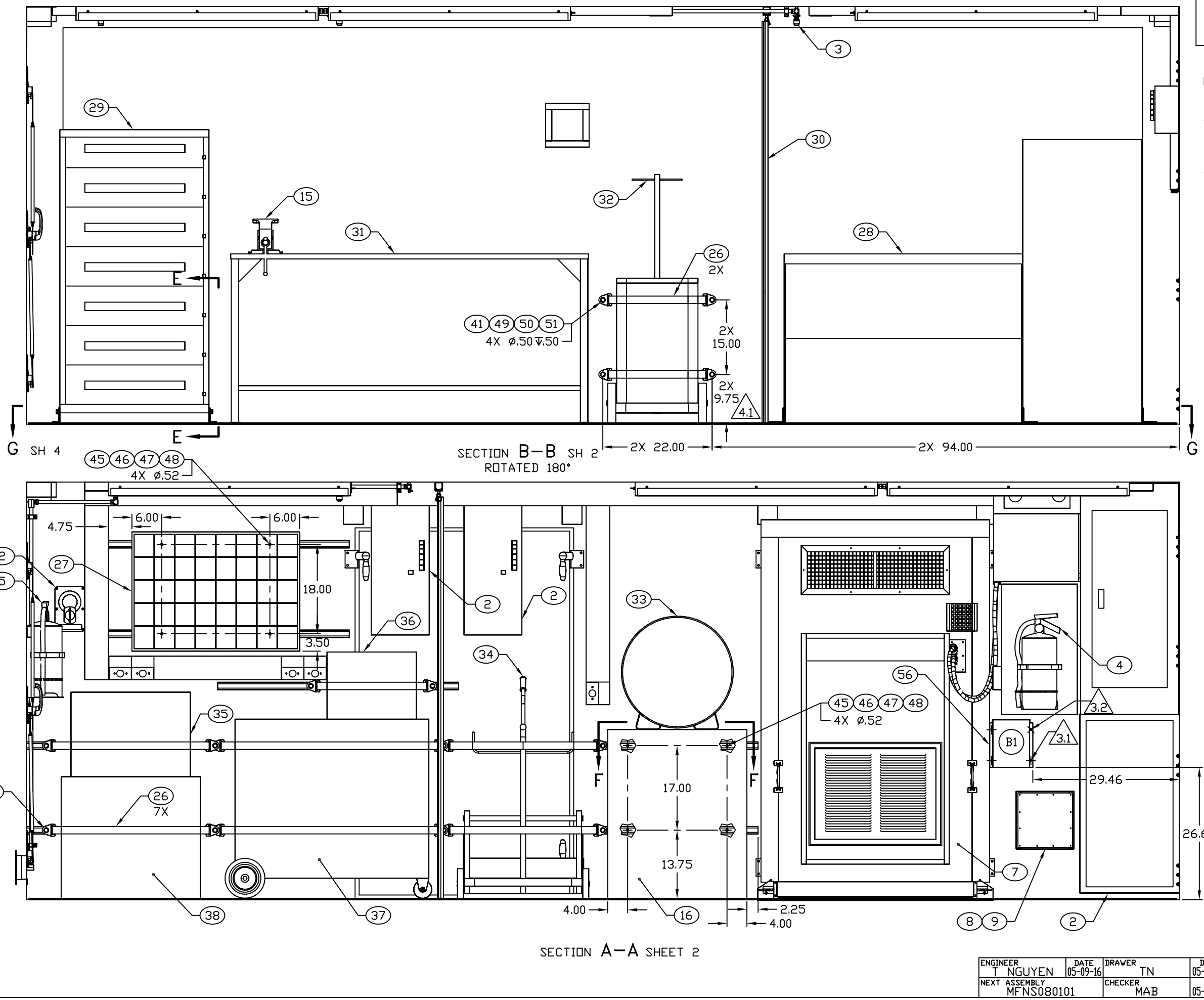


SECTION A–A SHEET 2

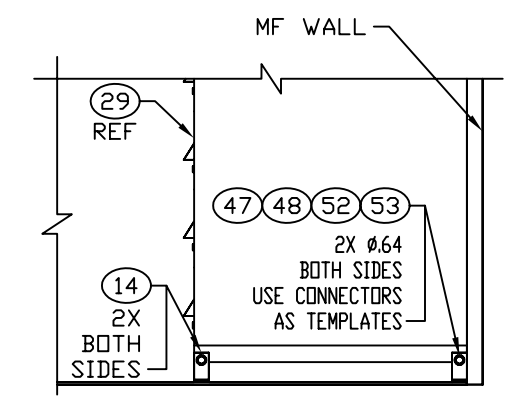


SECTION E–E

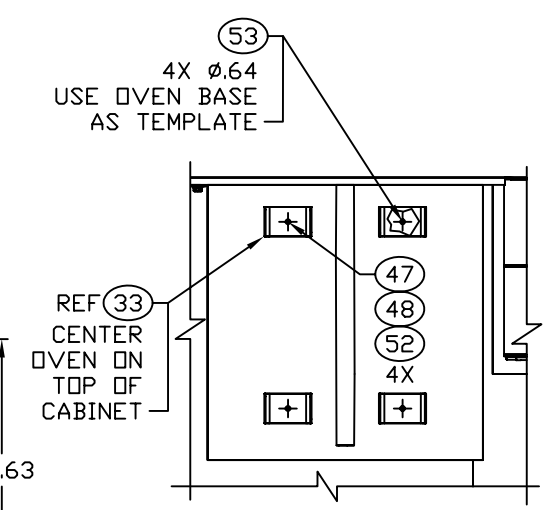


SECTION F–F

| ENGINEER | DATE | DRAWER | DATE | SIZE | CAGE CODE | DRAWING NUMBER | REV |
|---|---|---|---|---|---|---|---|
| T NGUYEN | 05-09-16 | TN | 05-09-16 | D | 91145 | MFNS060101 | B |
| NEXT ASSEMBLY MFNS080101 | | CHECKER MAB | 05-09-16 | SCALE 1/10 | | SHEET 3 | |