| REVISION HISTORY | | | |
|---|---|---|---|
| REV | DESCRIPTION | DATE | APPROVAL |

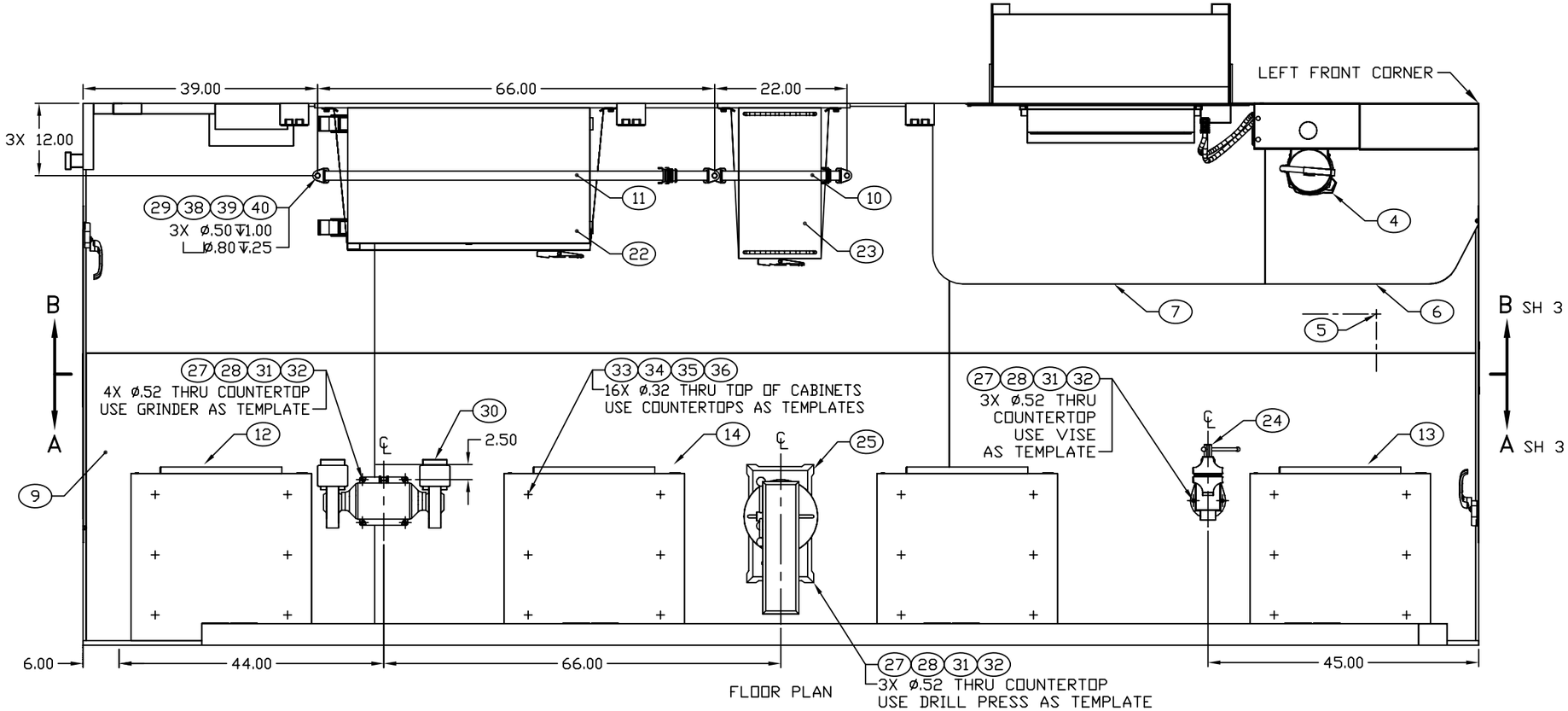


FLOOR PLAN

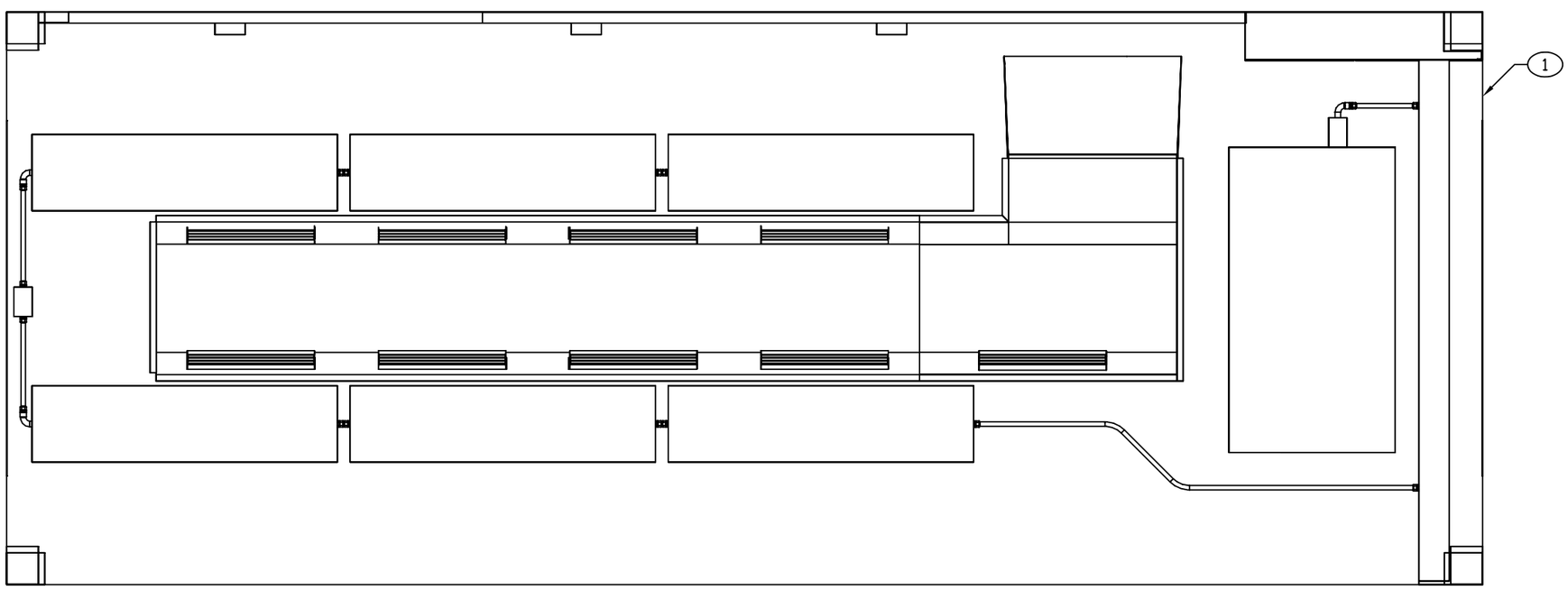


CEILING PLAN

| ENGINEER | DATE | DRAWER | DATE | SIZE | CAGE CODE | DRAWING NUMBER | REV |
|---|---|---|---|---|---|---|---|
| T NGUYEN | 02-04-25 | TN | 02-04-25 | D | 91145 | MFMM090101 | – |
| NEXT ASSEMBLY | | CHECKER | | SCALE | | SHEET | |
| FINAL | | MAB | 02-04-25 | 1/11 | | 2 | |

| REVISION HISTORY | | | |
|---|---|---|---|
| REV | DESCRIPTION | DATE | APPROVAL |

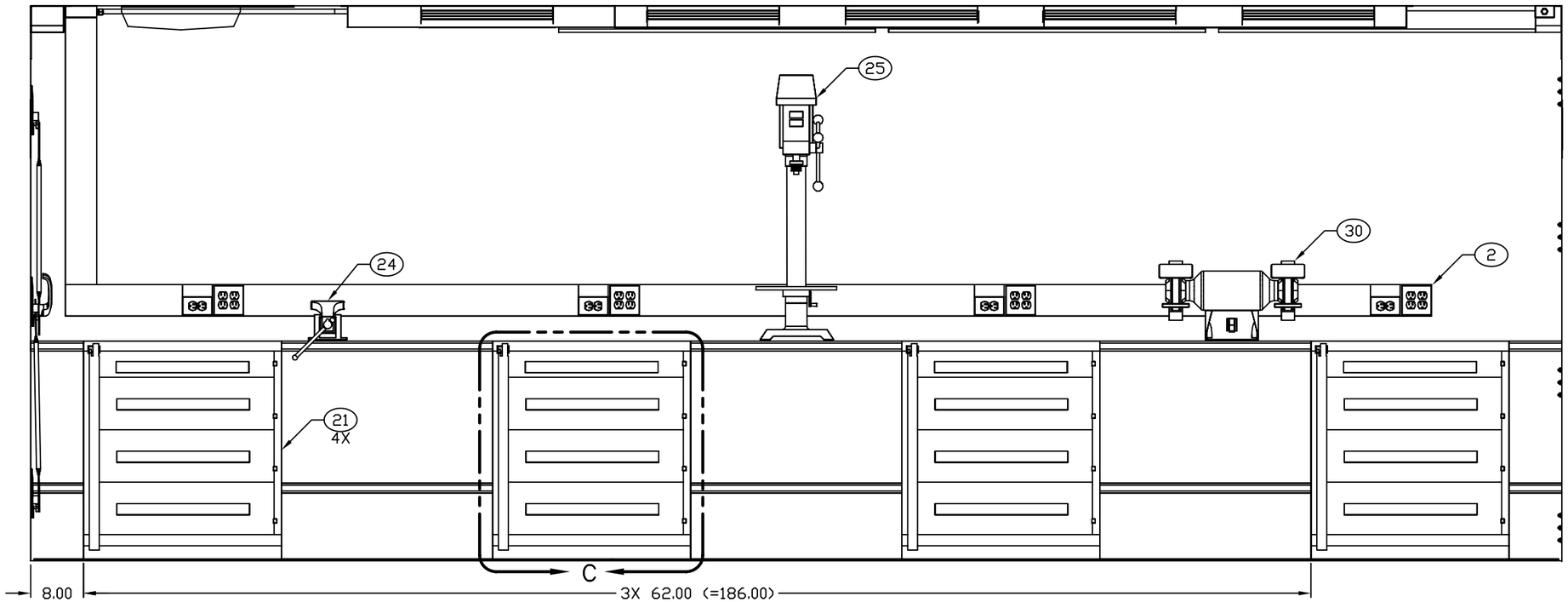


SECTION A–A SHEET 2
ROTATED 180°

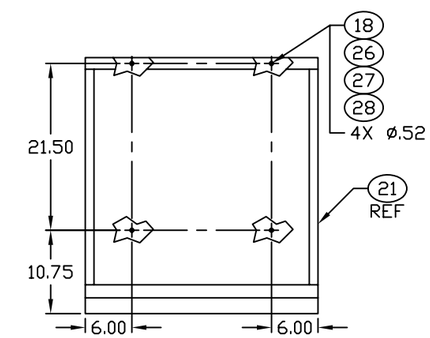


VIEW C
4X
DRAWERS AND LOCK
BAR NOT SHOWN

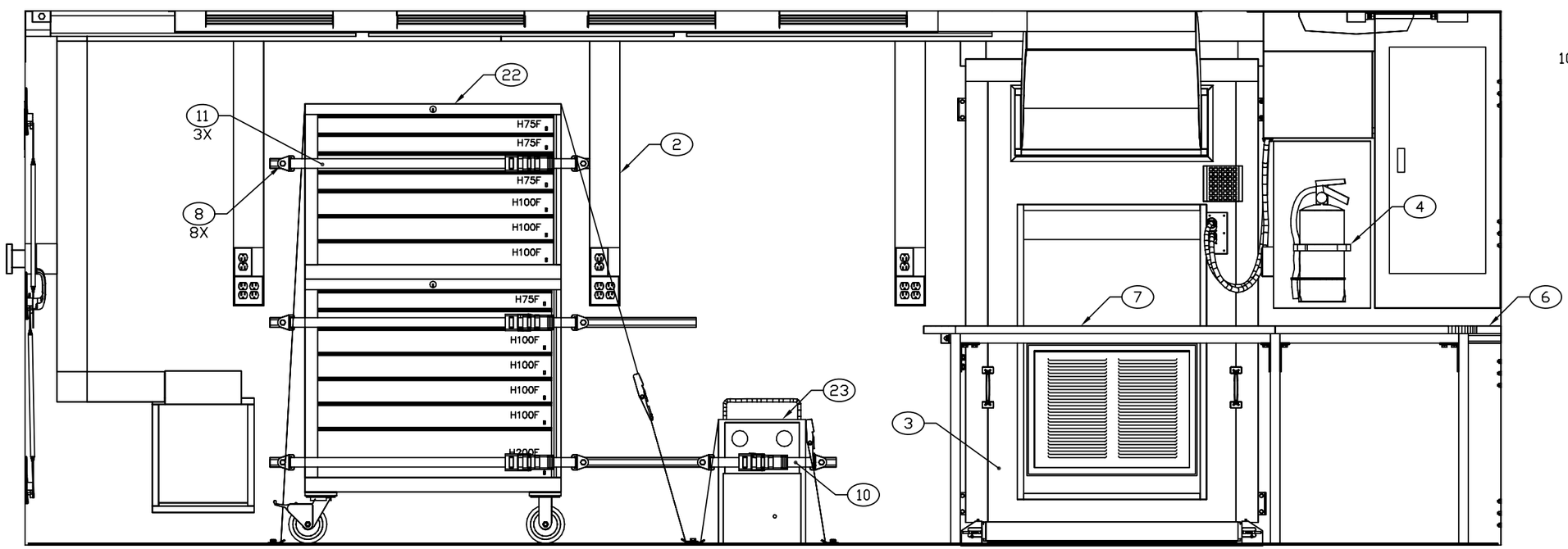


SECTION B–B SHEET 2

| ENGINEER | DATE | DRAWER | DATE | SIZE | CAGE CODE | DRAWING NUMBER | REV |
|---|---|---|---|---|---|---|---|
| T NGUYEN | 02-04-25 | TN | 02-04-25 | D | 91145 | MFMM090101 | – |
| NEXT ASSEMBLY | | CHECKER | | SCALE | | SHEET | |
| FINAL | | MAB | 02-04-25 | 1/10 | | 3 | |