REVISION HISTORY			
REV	DESCRIPTION	DATE	APPROVAL
A	(3) FLOOR CHANNEL RECONFIGURED.		

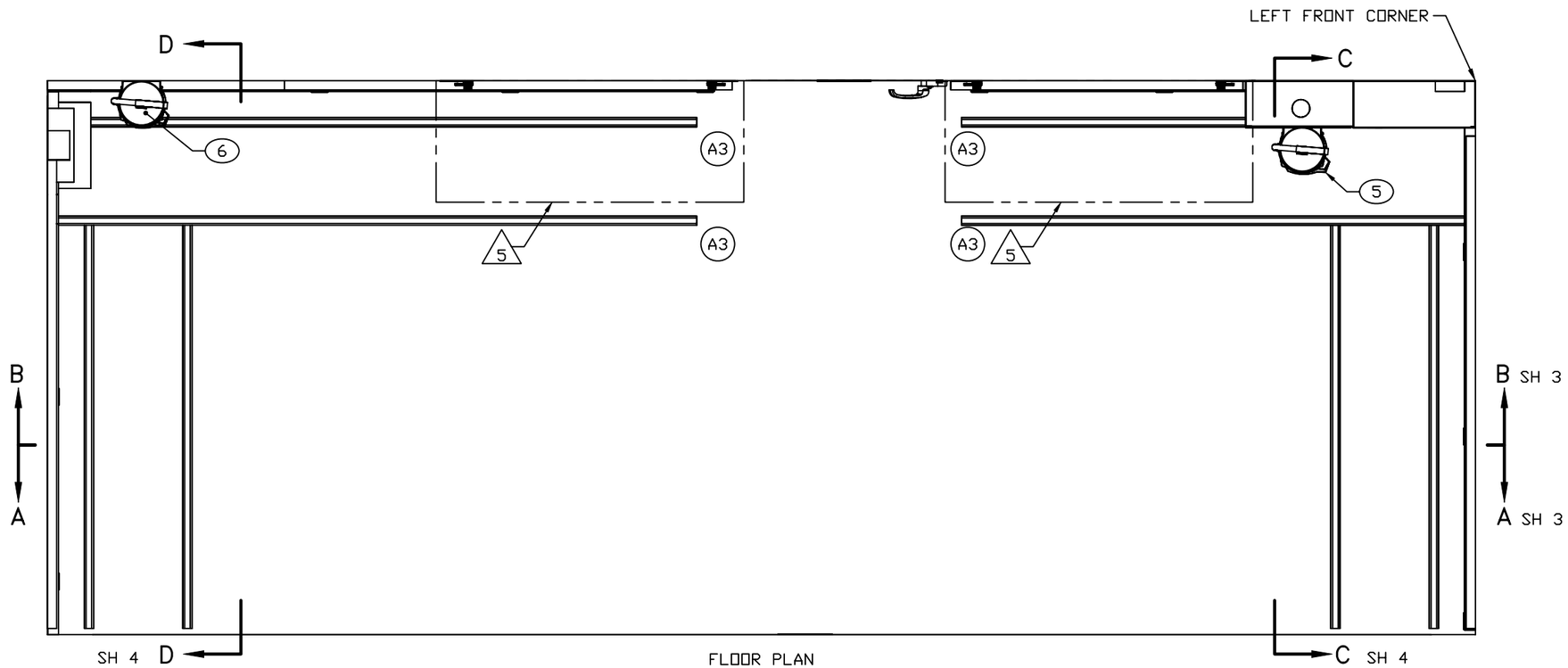

FLOOR PLAN

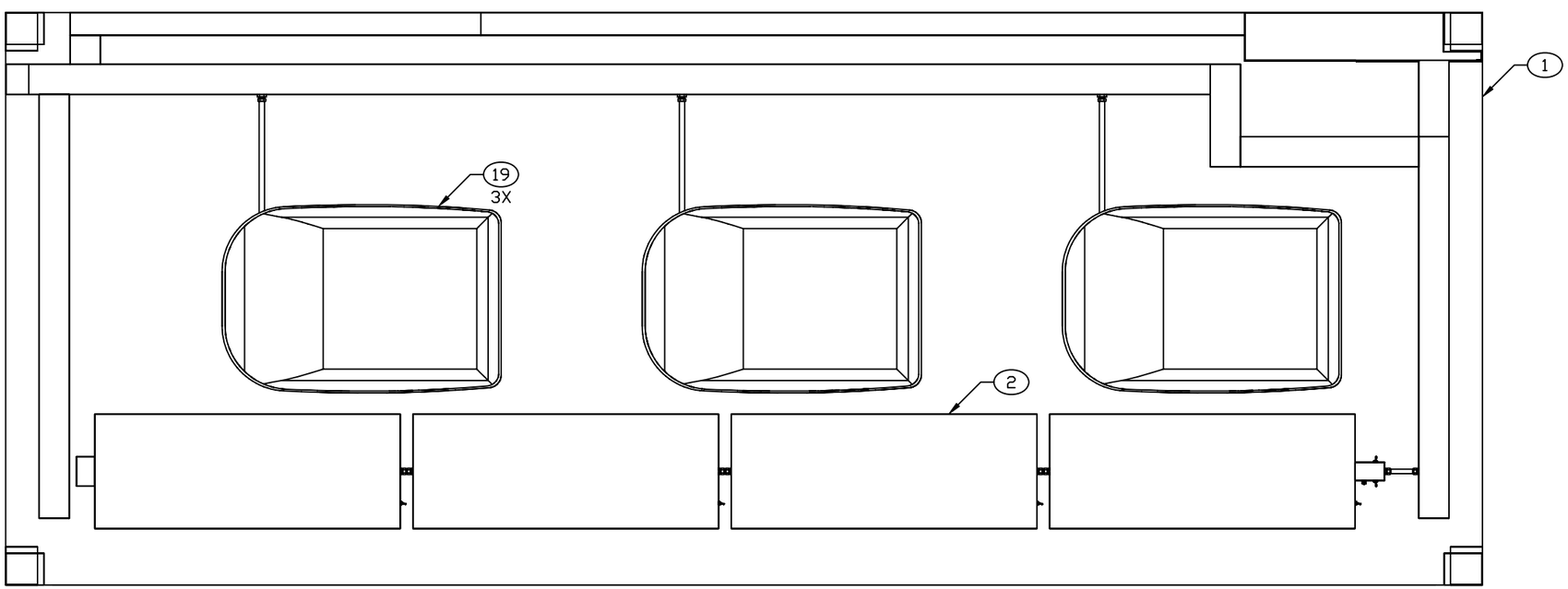

CEILING PLAN AND ROOF-MOUNTED AIR CONDITIONERS

ENGINEER	DATE	DRAWER	DATE	SIZE	CAGE CODE	DRAWING NUMBER	REV
T NGUYEN	XX-XX-XX	TN	XX-XX-XX	D	91145	MFLM070101	A
NEXT ASSEMBLY		CHECKER		SCALE		SHEET	
FINAL		MAB	XX-XX-XX	1/11		2	

REVISION HISTORY			
REV	DESCRIPTION	DATE	APPROVAL
A	(4) REAR WALL CHANNEL ADDED.		

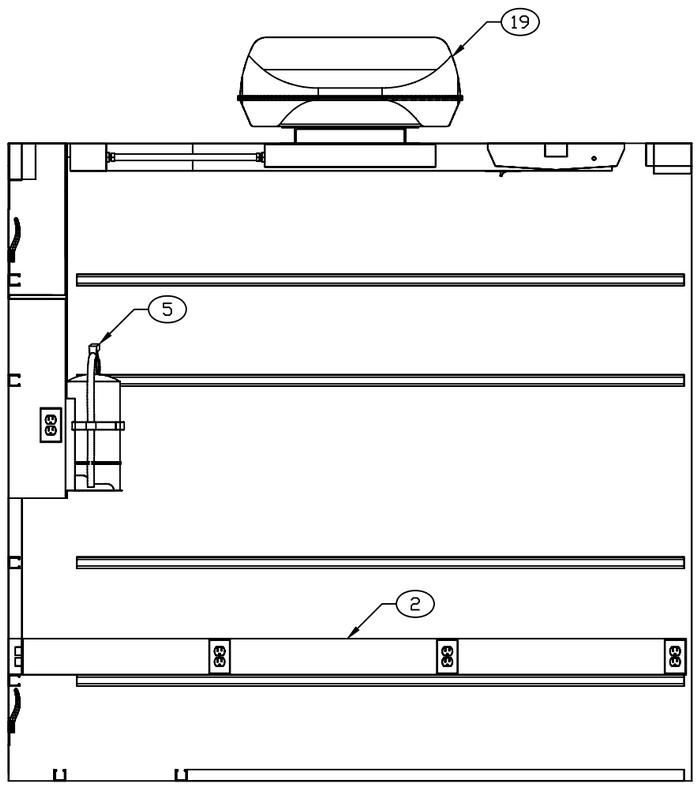

SECTION C–C SHEET 2
ROTATED 90° CCW

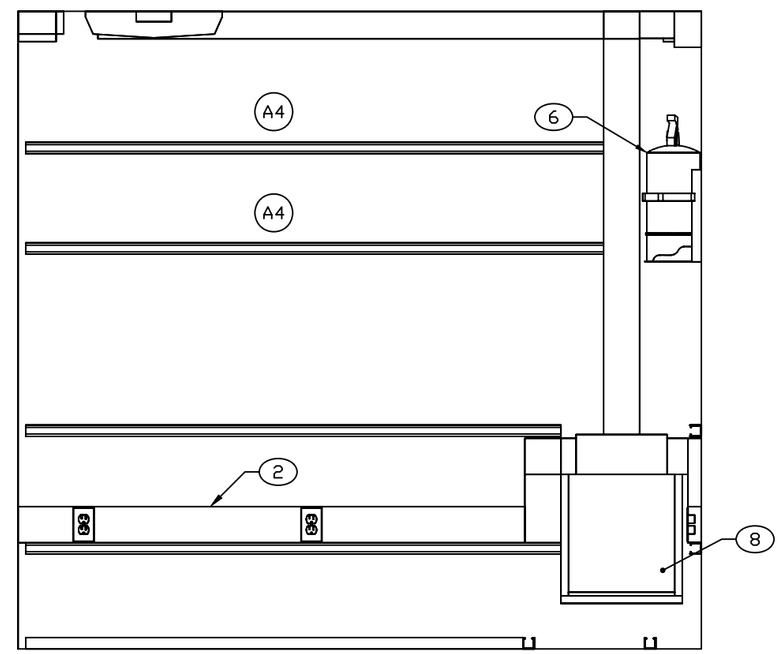

SECTION D–D SHEET 2
ROTATED 90° CW

ENGINEER	DATE	DRAWER	DATE	SIZE	CAGE CODE	DRAWING NUMBER	REV
T NGUYEN	XX-XX-XX	TN	XX-XX-XX	D	91145	MFLM070101	A
NEXT ASSEMBLY		CHECKER		SCALE		SHEET	
FINAL		MAB	XX-XX-XX	1/10		4	