REVISION HISTORY			
REV	DESCRIPTION	DATE	APPROVAL

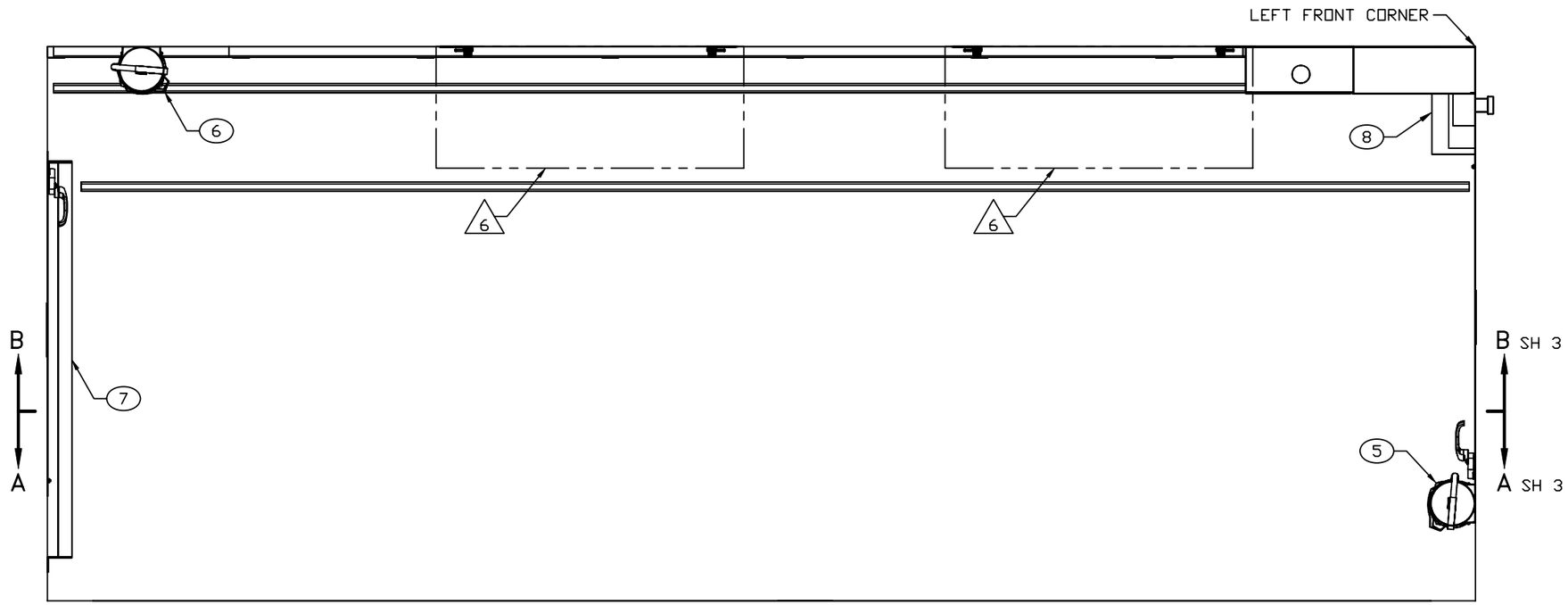

FLOOR PLAN

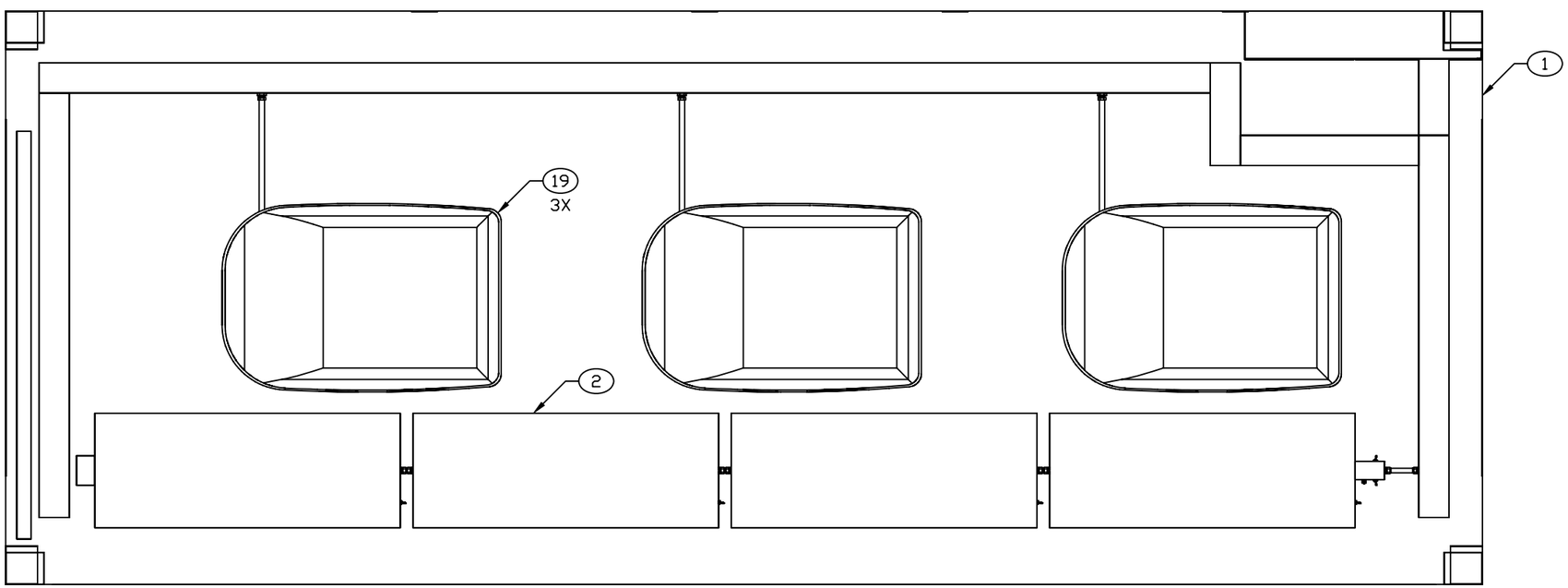

CEILING PLAN AND ROOF-MOUNTED AIR CONDITIONERS

ENGINEER	DATE	DRAWER	DATE	SIZE	CAGE CODE	DRAWING NUMBER	REV
T NGUYEN	XX-XX-XX	TN	XX-XX-XX	D	91145	MFLM060101	–
NEXT ASSEMBLY		CHECKER					
FINAL		MAB	XX-XX-XX	SCALE 1/11		SHEET 2	

REVISION HISTORY			
REV	DESCRIPTION	DATE	APPROVAL

NOTE:

3.1 SWITCH LATCH MODIFICATIONS, FIND NUMBERS 9 AND 10, DRAWING NO 1339AS376-1 CAGE 30003, AS SHOWN.

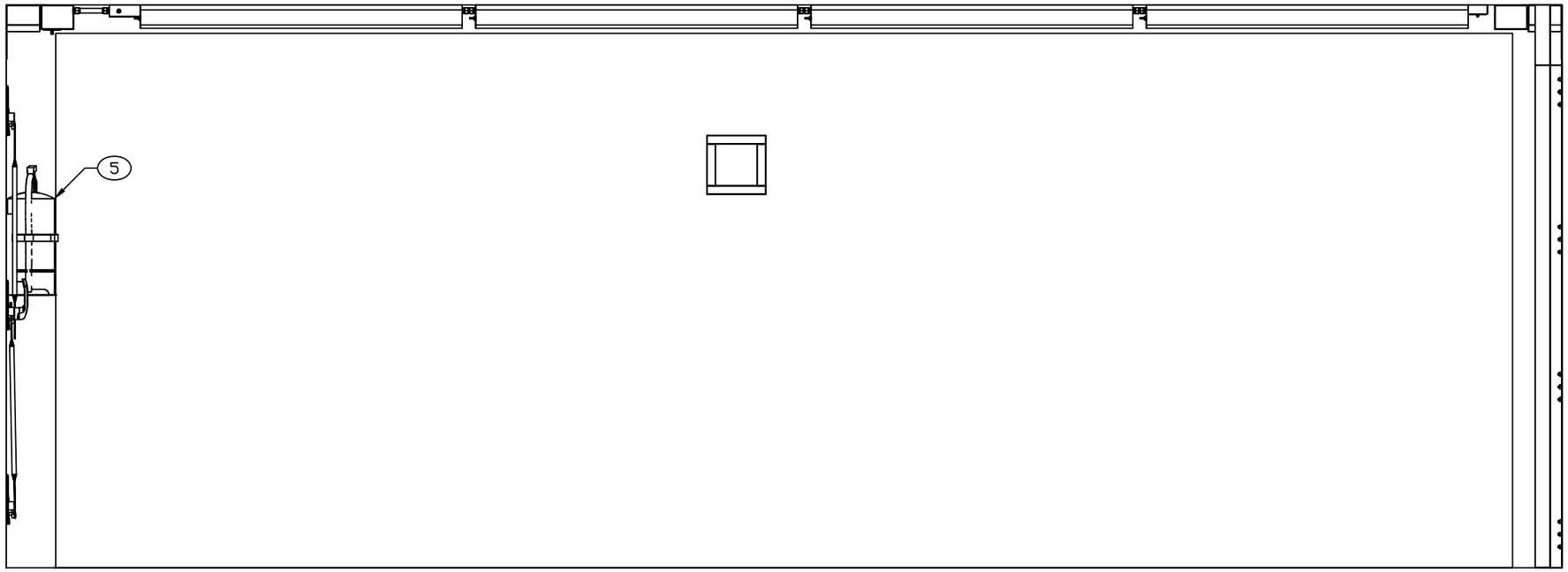

SECTION A–A SHEET 2
ROTATED 180°

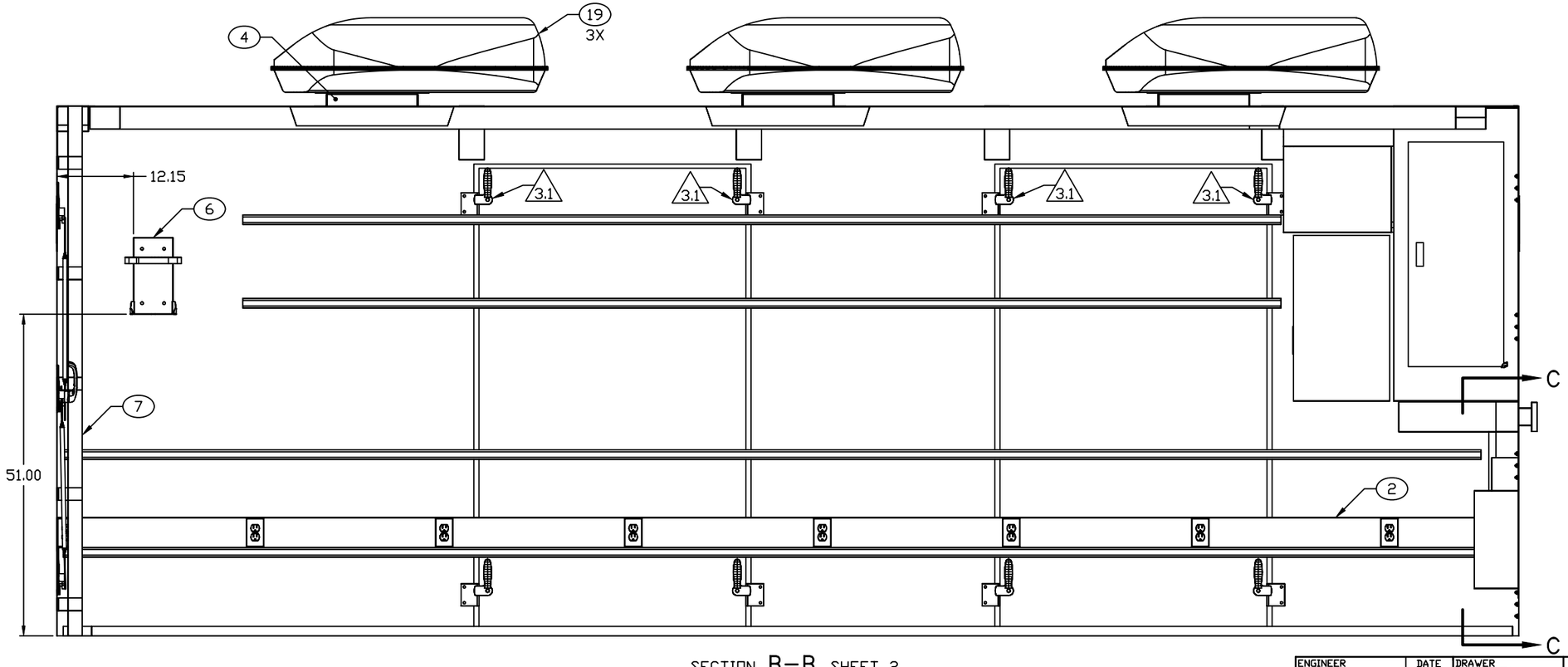

SECTION B–B SHEET 2
FIRE EXTINGUISHER NOT SHOWN

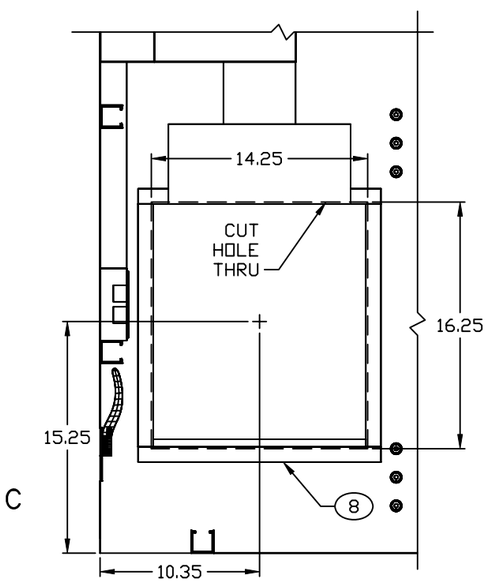

SECTION C–C
SCALE 1/5

ENGINEER	DATE	DRAWER	DATE	SIZE	CAGE CODE	DRAWING NUMBER	REV
T NGUYEN	XX-XX-XX	TN	XX-XX-XX	D	91145	MFLM060101	–
NEXT ASSEMBLY		CHECKER		SCALE		SHEET	
FINAL		MAB	XX-XX-XX	1/10		3	