REVISION HISTORY			
REV	DESCRIPTION	DATE	APPROVAL

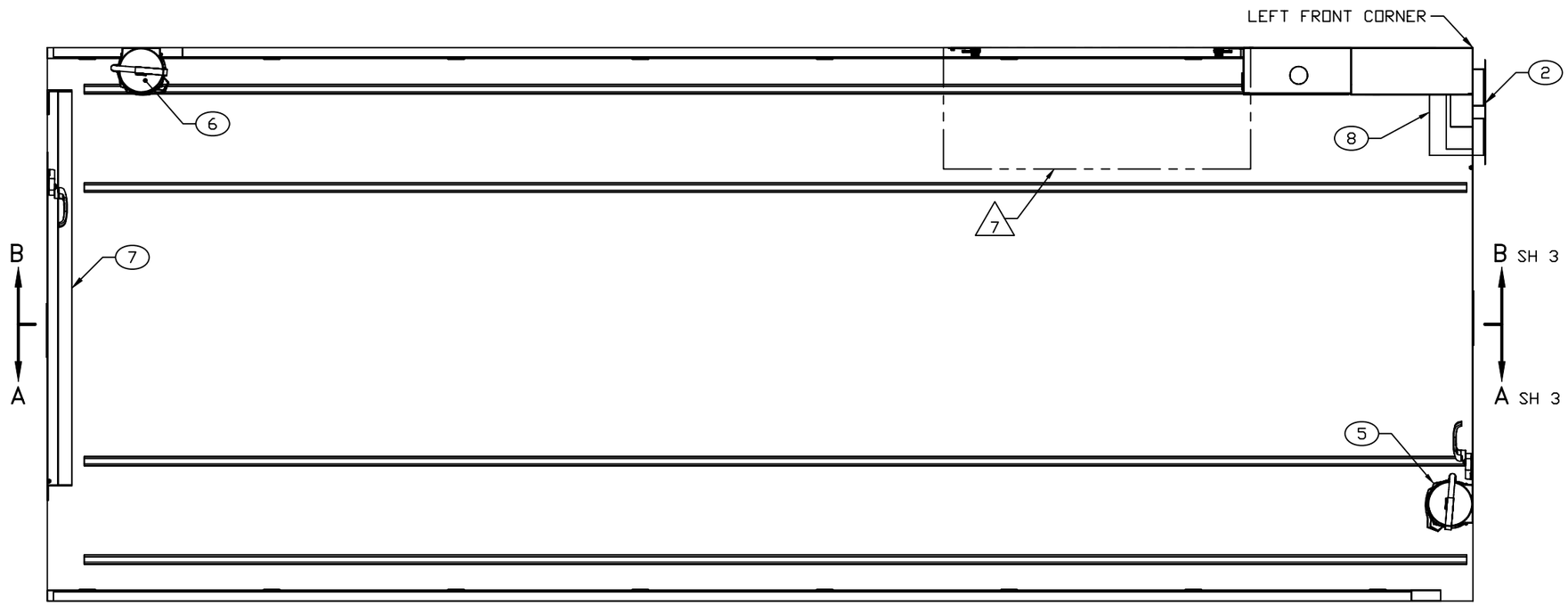

FLOOR PLAN

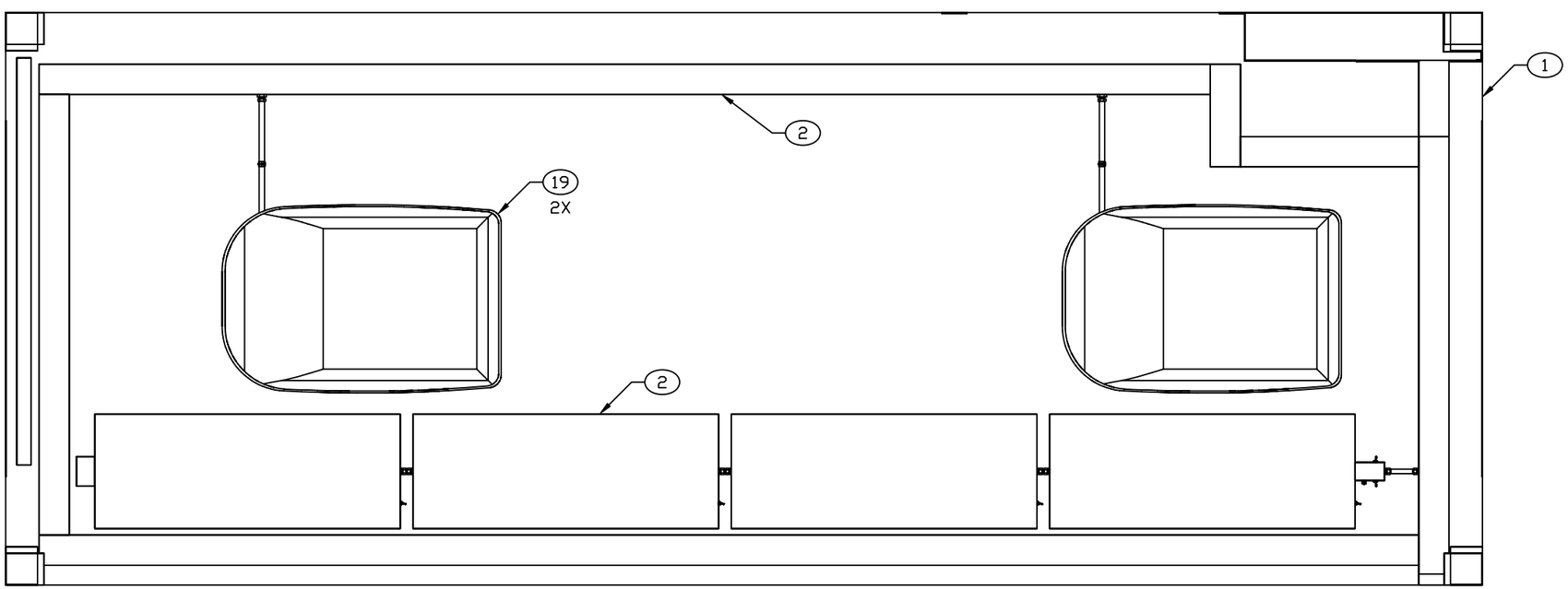

CEILING PLAN

ENGINEER	DATE	DRAWER	DATE	SIZE	CAGE CODE	DRAWING NUMBER	REV
T NGUYEN	XX-XX-XX	TN	XX-XX-XX	D	91145	MFLM050101	–
NEXT ASSEMBLY		CHECKER		SCALE		SHEET	
FINAL		MAB	XX-XX-XX	1/11		2	

REVISION HISTORY			
REV	DESCRIPTION	DATE	APPROVAL

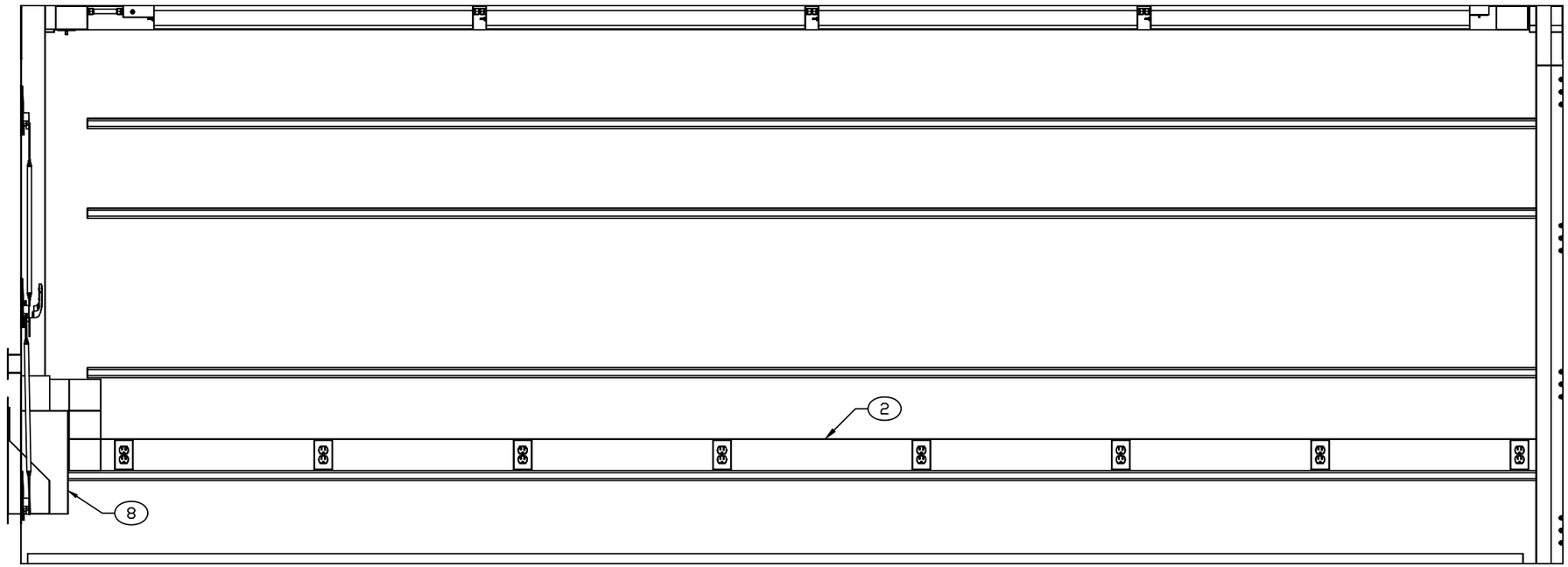

SECTION A–A SHEET 2
ROTATED 180°

NOTE:

3.1 SWITCH LATCH LOCATIONS AS SHOWN.

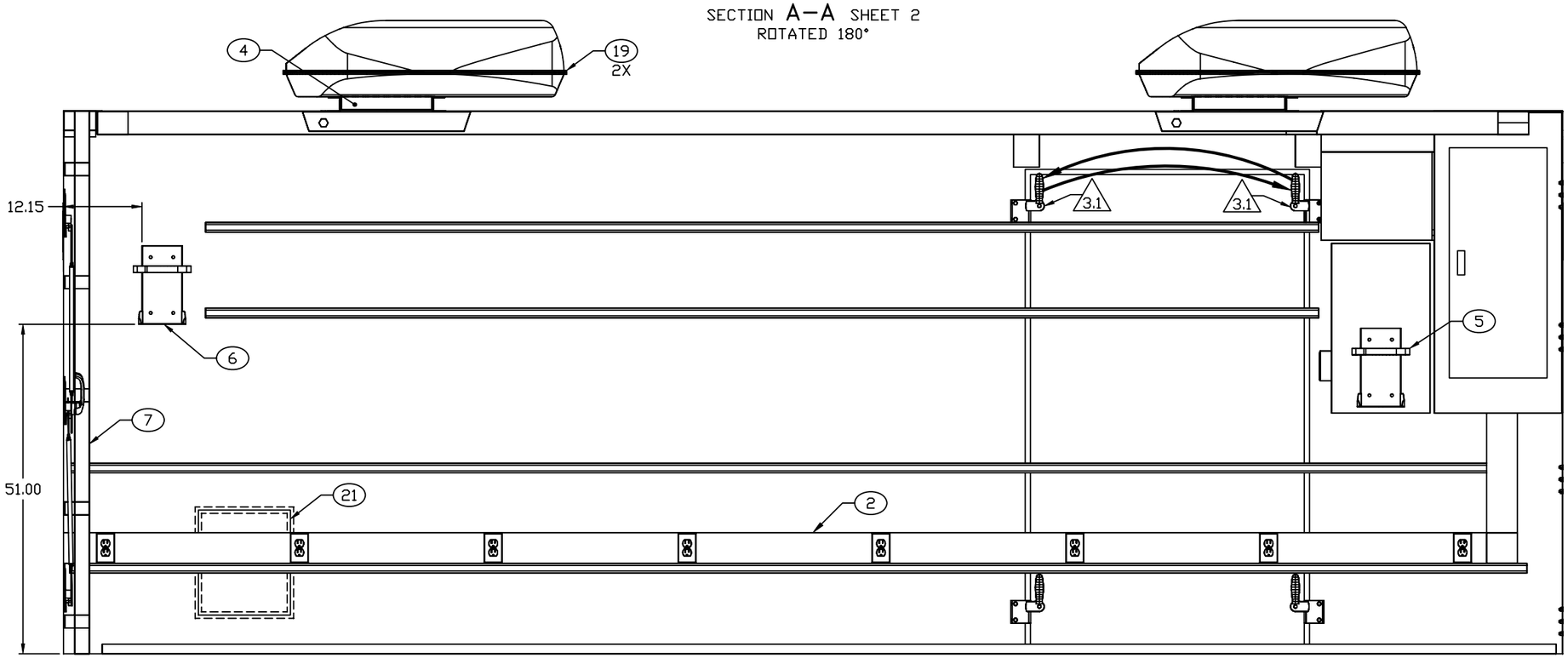

SECTION B–B SHEET 2
FIRE EXTINGUISHERS NOT SHOWN

ENGINEER	DATE	DRAWER	DATE	SIZE	CAGE CODE	DRAWING NUMBER	REV
T NGUYEN	XX-XX-XX	TN	XX-XX-XX	D	91145	MFLM050101	–
NEXT ASSEMBLY		CHECKER		SCALE		SHEET	
FINAL		MAB	XX-XX-XX	1/10		3	