REVISION HISTORY			
REV	DESCRIPTION	DATE	APPROVAL
A	REVISED AND PARTIALLY REDRAWN BY M. BEUSTER. (1) ITEM ADDED.	2006-01-31	R A VOTAW

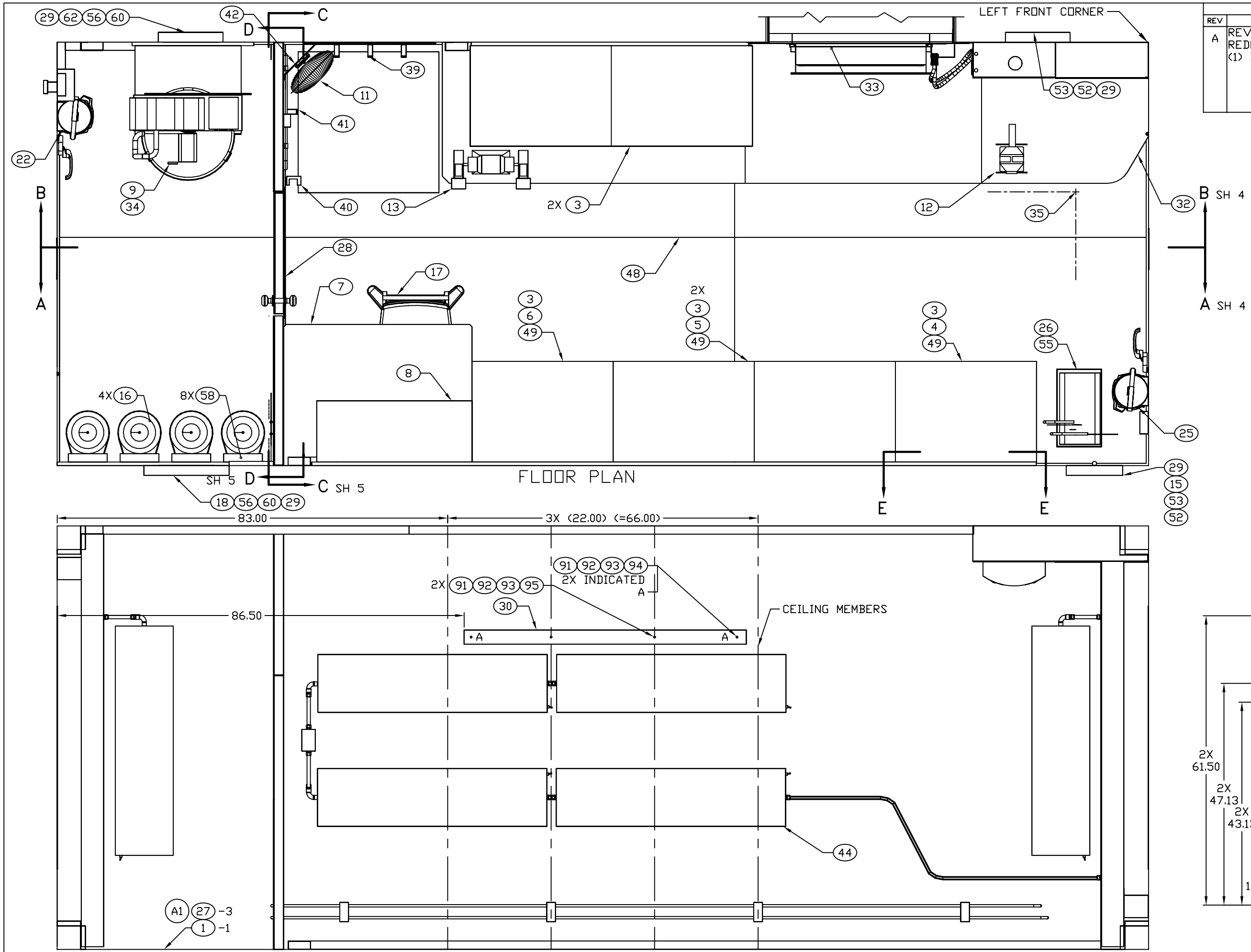

FLOOR PLAN

CEILING PLAN

ENGINEER	DATE	DRAWER	DATE	SIZE	CAGE CODE	DRAWING NUMBER	REV
M BEUSTER	2005-12-02	MAB	2005-12-02	D	91145	MFLM020501	A
NEXT ASSEMBLY		CHECKER		SCALE		SHEET	
FINAL		TN	2005-12-05	1/10		3	

REVISION HISTORY			
REV	DESCRIPTION	DATE	APPROVAL
A	REVISED AND PARTIALLY REDRAWN BY M. BEUSTER. (1) ITEM ADDED.	2006-01-31	R A VOTAW

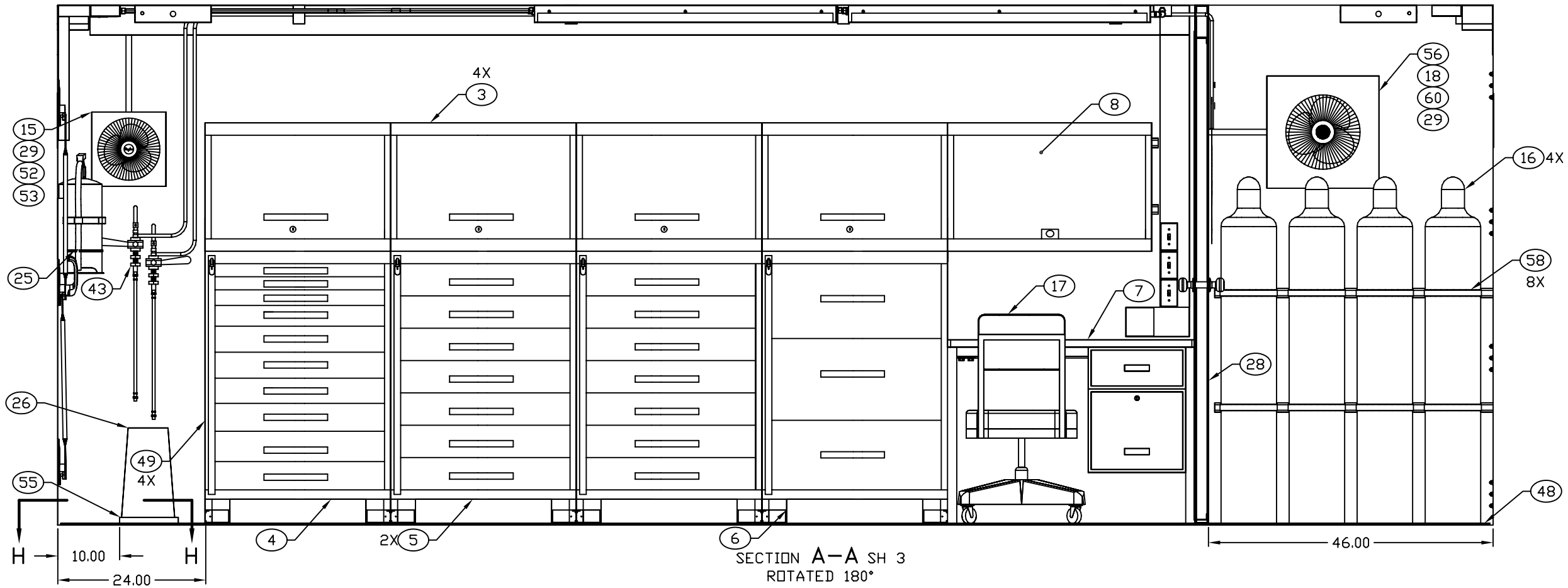

SECTION A–A SH 3
ROTATED 180°

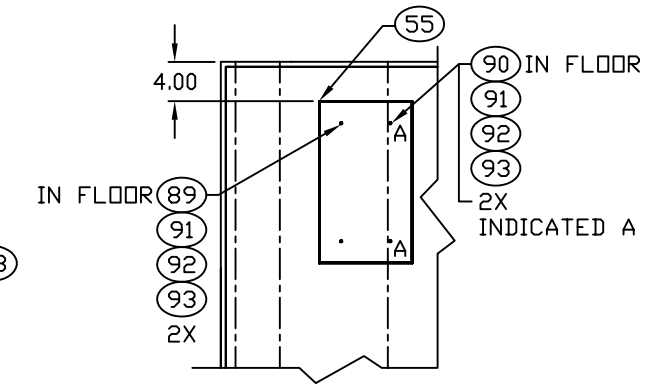

SECTION H–H

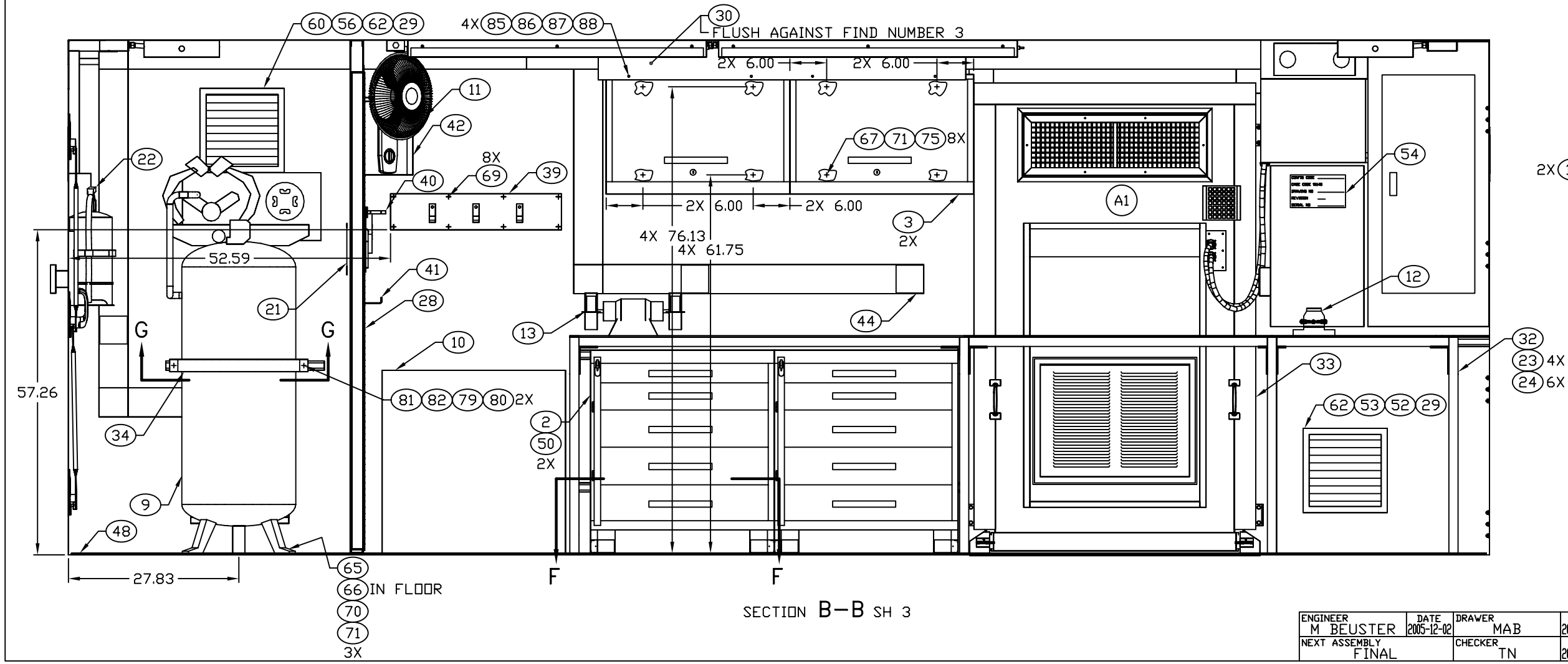

SECTION B–B SH 3

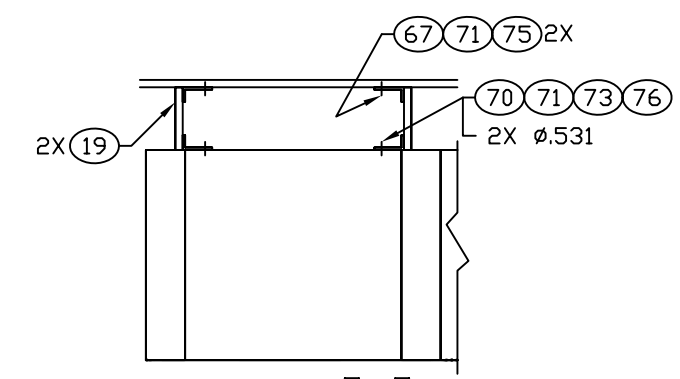

4X SECTION F–F

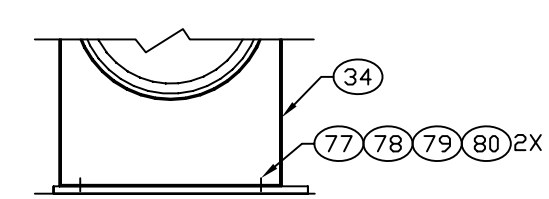

SECTION G–G

ENGINEER	DATE	DRAWER	DATE	SIZE	CAGE CODE	DRAWING NUMBER	REV
M BEUSTER	2005-12-02	MAB	2005-12-02	D	91145	MFLM020501	A
NEXT ASSEMBLY		CHECKER		SCALE		SHEET	
FINAL		TN	2005-12-05	1/10		4	