REVISION HISTORY			
REV	DESCRIPTION	DATE	APPROVAL
B	(5) FIND NO ADDED.		

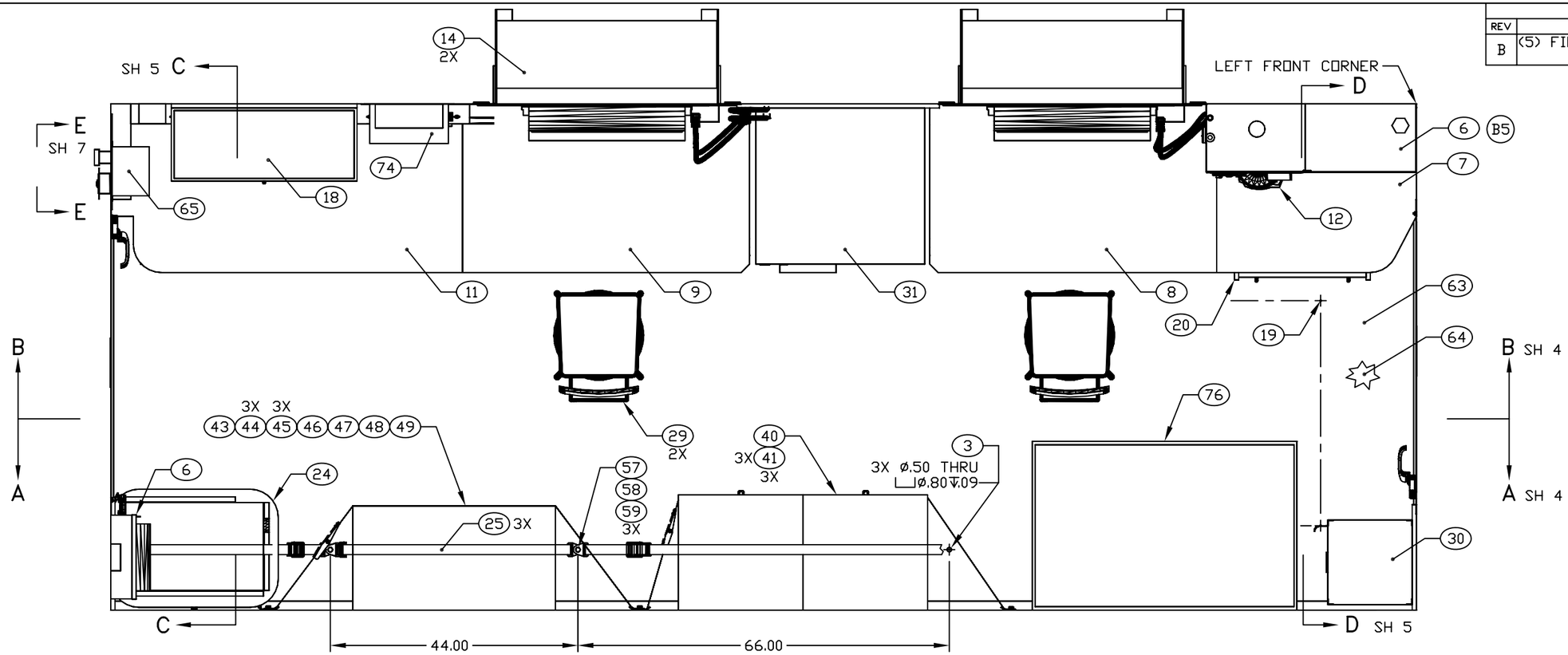

FLOOR PLAN

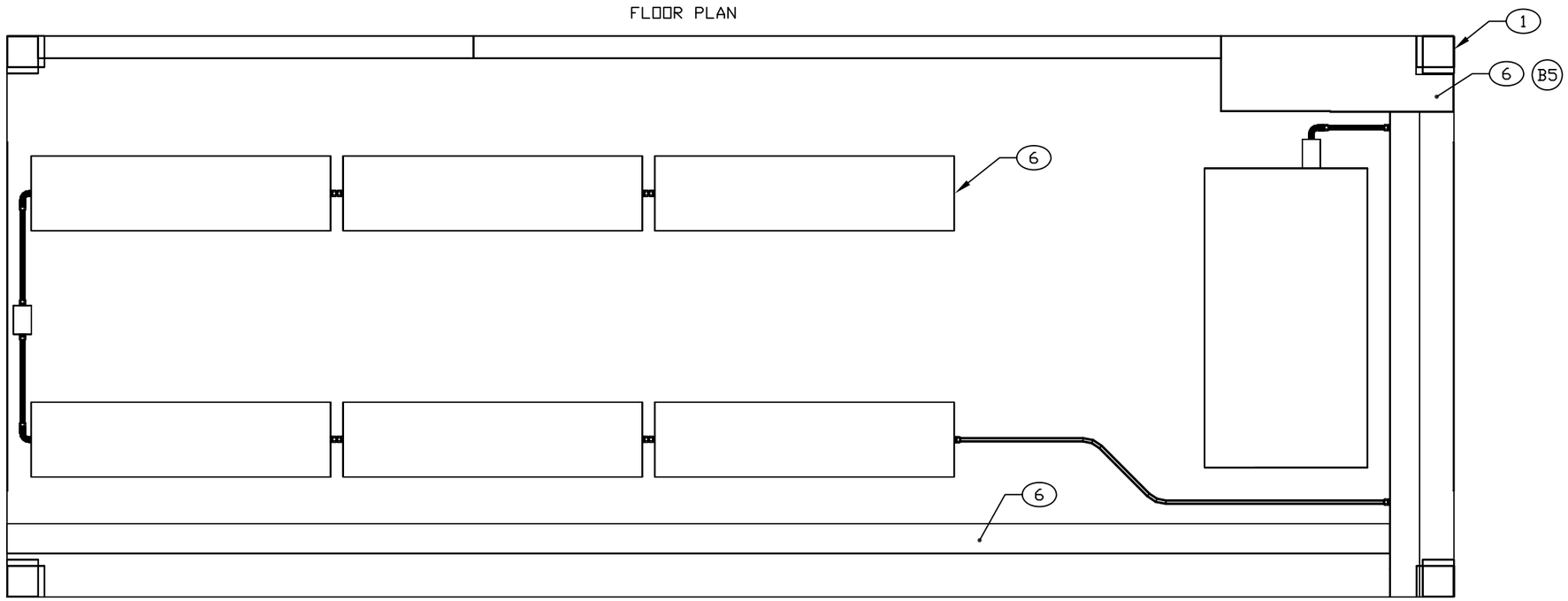

CEILING PLAN

ENGINEER	DATE	DRAWER	DATE	SIZE	CAGE CODE	DRAWING NUMBER	REV
T. NGUYEN	99-05	PRV	99-12-07	D	91145	MFKA290101	B
NEXT ASSEMBLY		CHECKER		SCALE		SHEET	
FINAL		MAB	99-05-13	1/11		3	

REVISION HISTORY			
REV	DESCRIPTION	DATE	APPROVAL
B	(6) 240V AC 50-HZ RECEPTACLE ROTATED. (7) FIND NO CHANGED.		

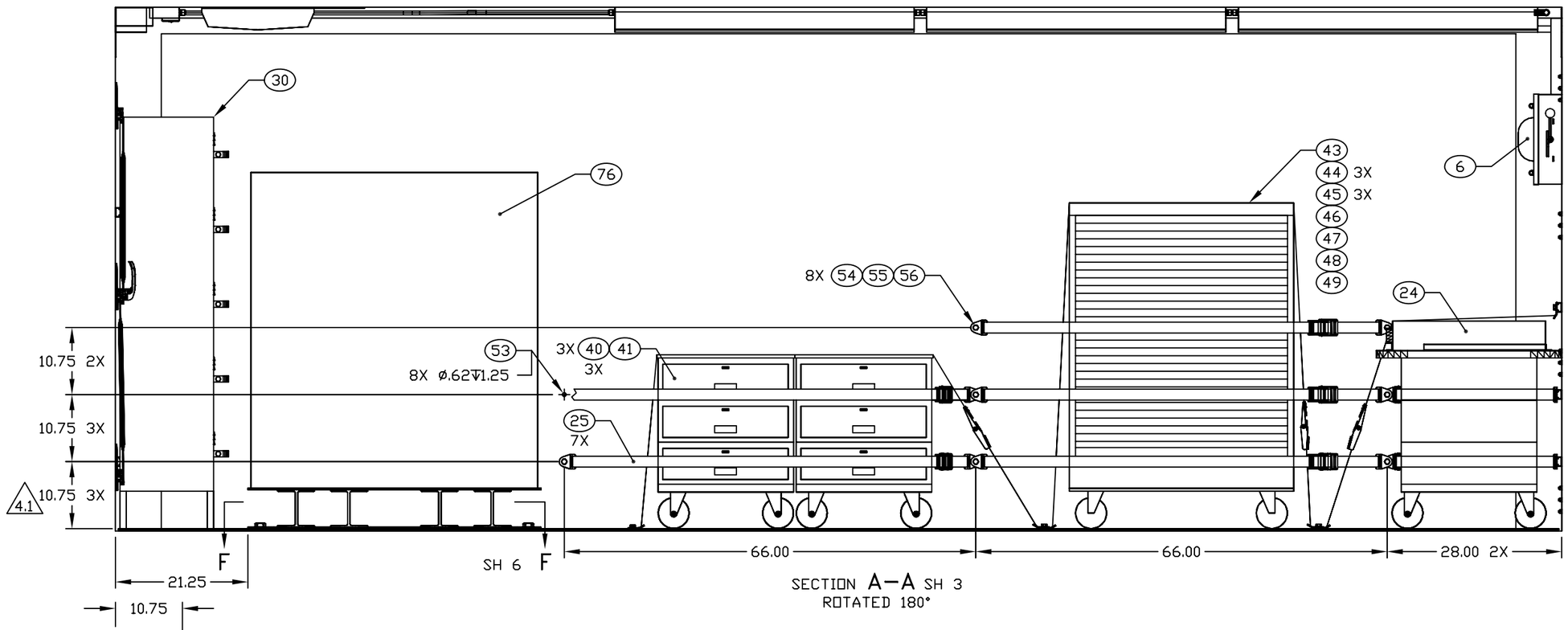

SECTION A–A SH 3
ROTATED 180°

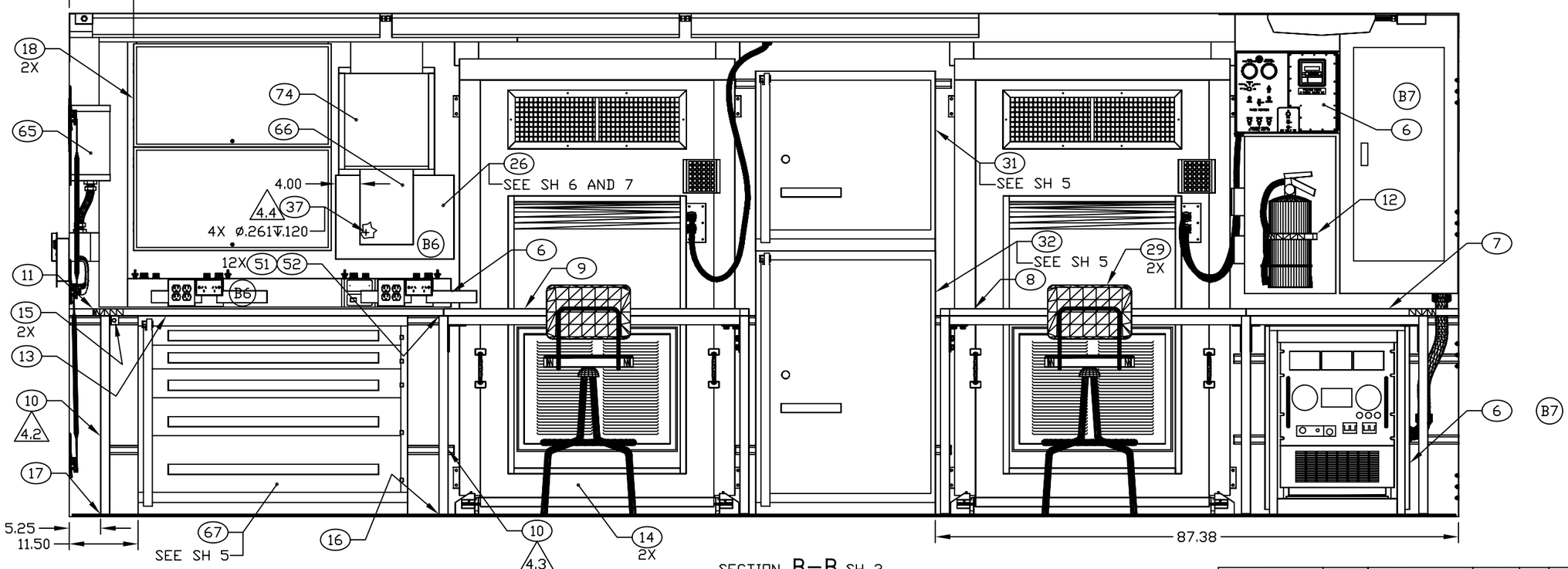

SECTION B–B SH 3

NOTES:

4.1 MEASURE FROM TOP OF FLOOR COVERING, FIND NO 63.

4.2 REPLACE CORNER CONNECTOR, PART NO B-921, CAGE 79725 OF FRAME ASSY, FIND NO 10 WITH FIVE HOLE ANGLE CONNECTOR, FIND NO 35. REUSE EXISTING HARDWARE TO INSTALL ANGLE.

4.3 REPOSITION CORNER CONNECTOR, PART NO B-921, CAGE 79725 OF FRAME ASSY, FIND NO 10 TO ACCOMMODATE WORKSURFACE ASSY INSTL, FIND NO 9. REUSE EXISTING HARDWARE.

4.4 USE PANEL MOUNTING HOLES AS TEMPLATES.

ENGINEER	DATE	DRAWER	DATE	SIZE	CAGE CODE	DRAWING NUMBER	REV
TUAN NGUYEN	99-05	PRV	99-12-07	D	91145	MFKA290101	B
NEXT ASSEMBLY		CHECKER		SCALE		SHEET	
FINAL		MAB	99-05-13	1/10		4	

REVISION HISTORY			
REV	DESCRIPTION	DATE	APPROVAL
X	X	XX-XX-XX	

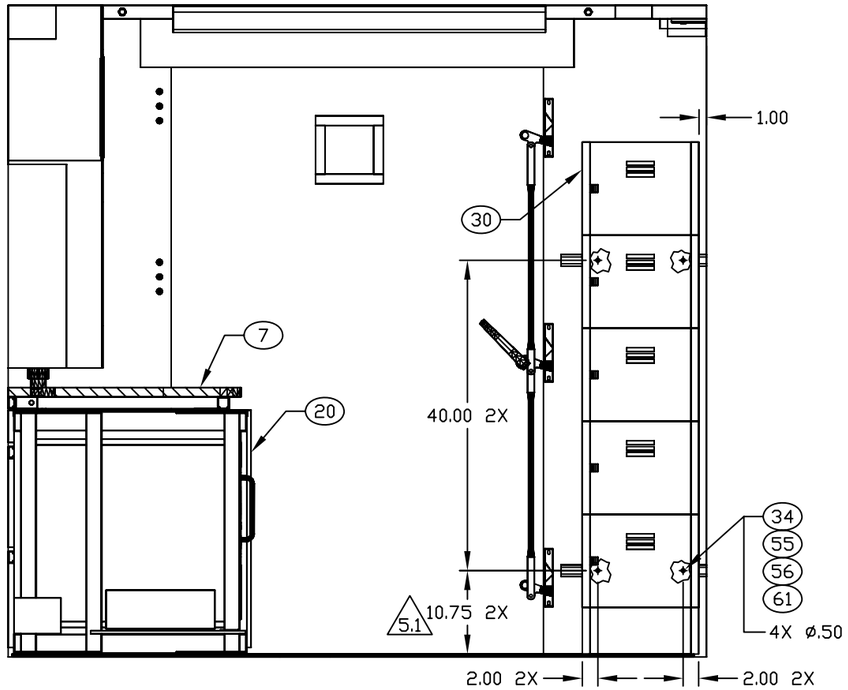

SECTION D–D SH 3
ROTATED 90° CCW
EQUIPMENT INSIDE FREQUENCY CONVERTER
RACK NOT SHOWN

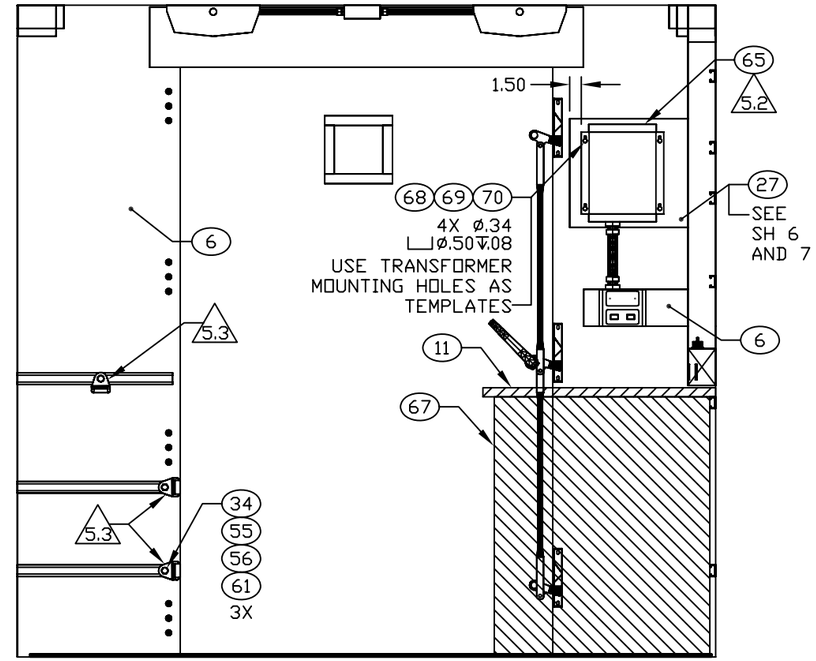

SECTION C–C SH 3
ROTATED 90° CW
BOOKCASES AND PRINTER STAND NOT SHOWN

NOTES:

5.1 MEASURE FROM TOP OF FLOOR COVERING, FIND NO 63.

5.2 CENTER TRANSFORMER VERTICALLY ON DOUBLER PLATE.

5.3 THIS ITEM IS PART OF FIND NO 25.

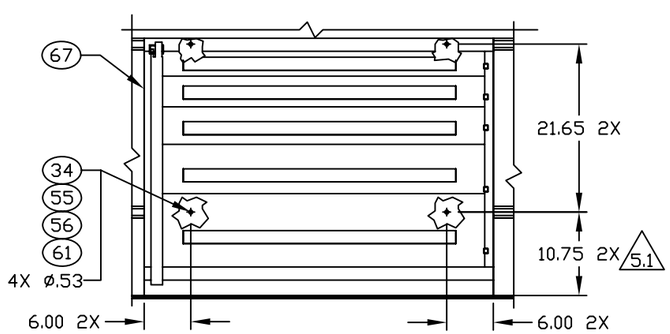

CABINET, FIND NO 67, INSTALLATION
SHEET 4

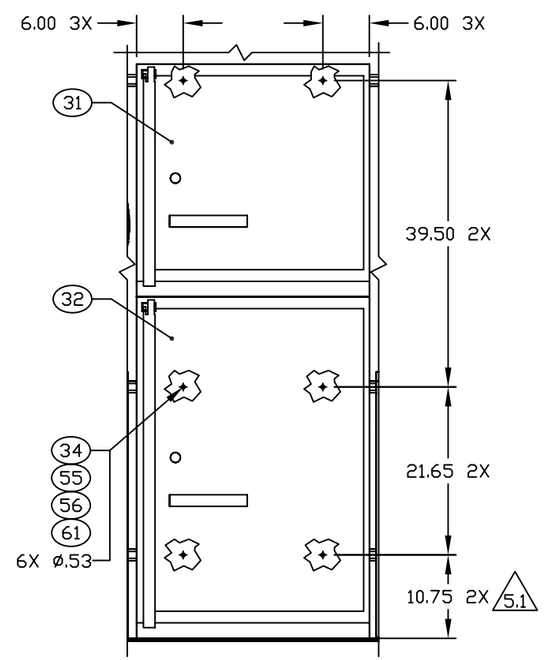

CABINETS, FIND NOS 31 AND 32,
INSTALLATION
SHEET 4

ENGINEER	DATE	DRAWER TN	DATE 99-05-04	SIZE D	CAGE CODE 91145	DRAWING NUMBER MFKA290101	REV –
NEXT ASSEMBLY FINAL		CHECKER		SCALE 1/10		SHEET 5	