REVISION HISTORY			
REV	DESCRIPTION	DATE	APPROVAL
B	REVISED AND PARTIALLY REDRAWN BY M. BEUSTER. (3) REDRAWN TO AGREE WITH ELECTRICAL INSTALLATION DRAWING. (4) DIMENSION CHANGED.	2008-10-17	J W ALLEN

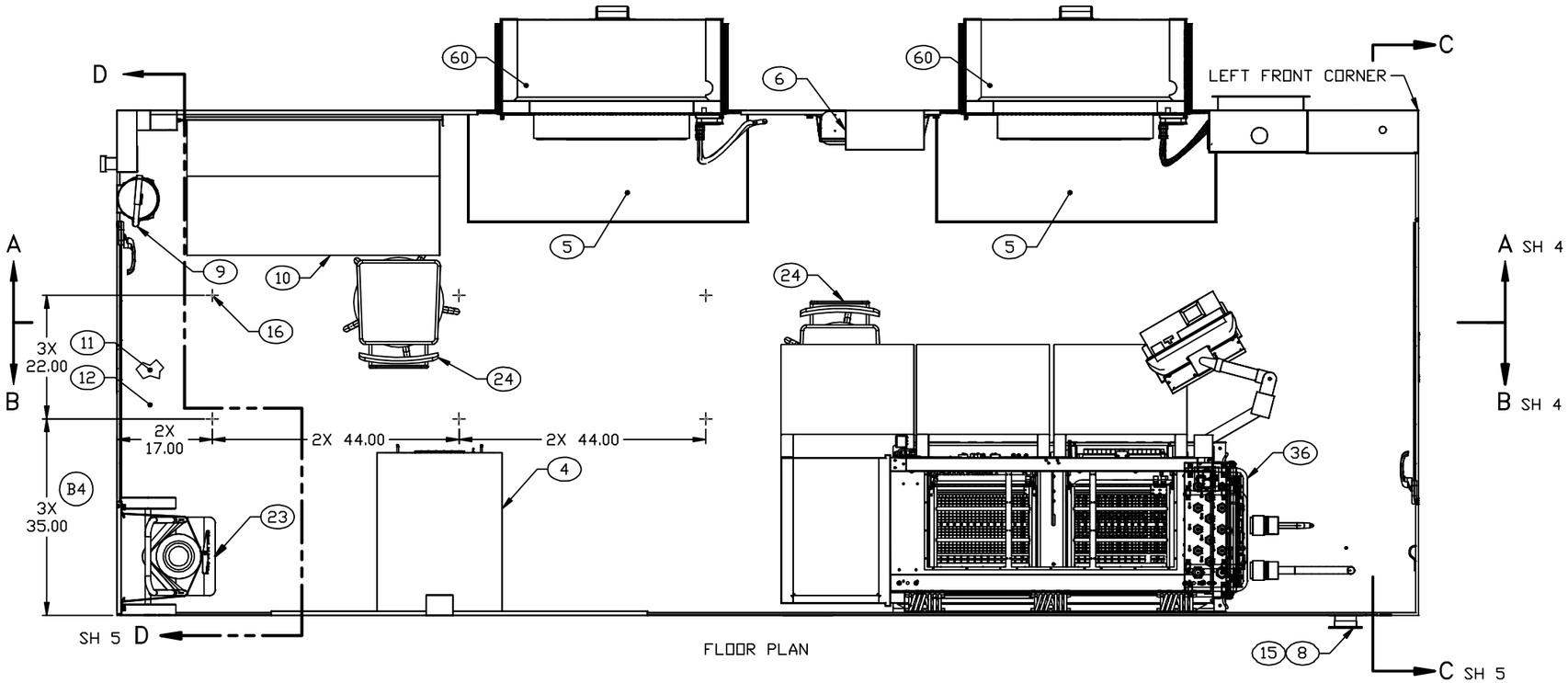

FLOOR PLAN

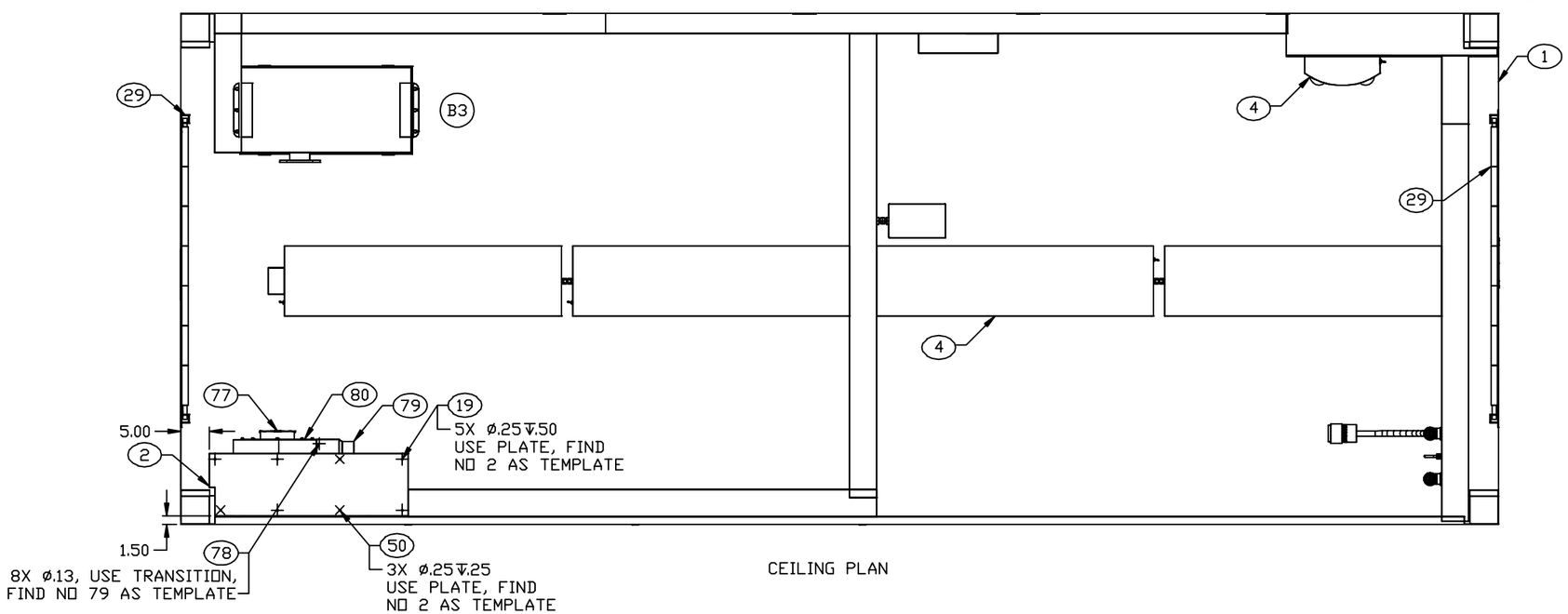

CEILING PLAN

ENGINEER	DATE	DRAWER	DATE	SIZE	CAGE CODE	DRAWING NUMBER	REV
M BEUSTER	2008-07-18	MAB	2008-07-18	D	91145	MFKA170301	B
NEXT ASSEMBLY		CHECKER		SCALE		SHEET	
FINAL		PRV	2008-07-18	1/12		3	

REVISION HISTORY			
REV	DESCRIPTION	DATE	APPROVAL
B	REVISED AND PARTIALLY REDRAWN BY M. BEUSTER. (3) REDRAWN TO AGREE WITH ELECTRICAL INSTALLATION DRAWING.	2008-10-17	J W ALLEN

NOTE(S):

4.1 SEAL AROUND EDGES WITH FIND NO 76.

4.2 STACK SLIDE ASSEMBLY PLATFORMS ONE ON TOP OF THE OTHER. STRAP TO CHANNELS AS SHOWN.

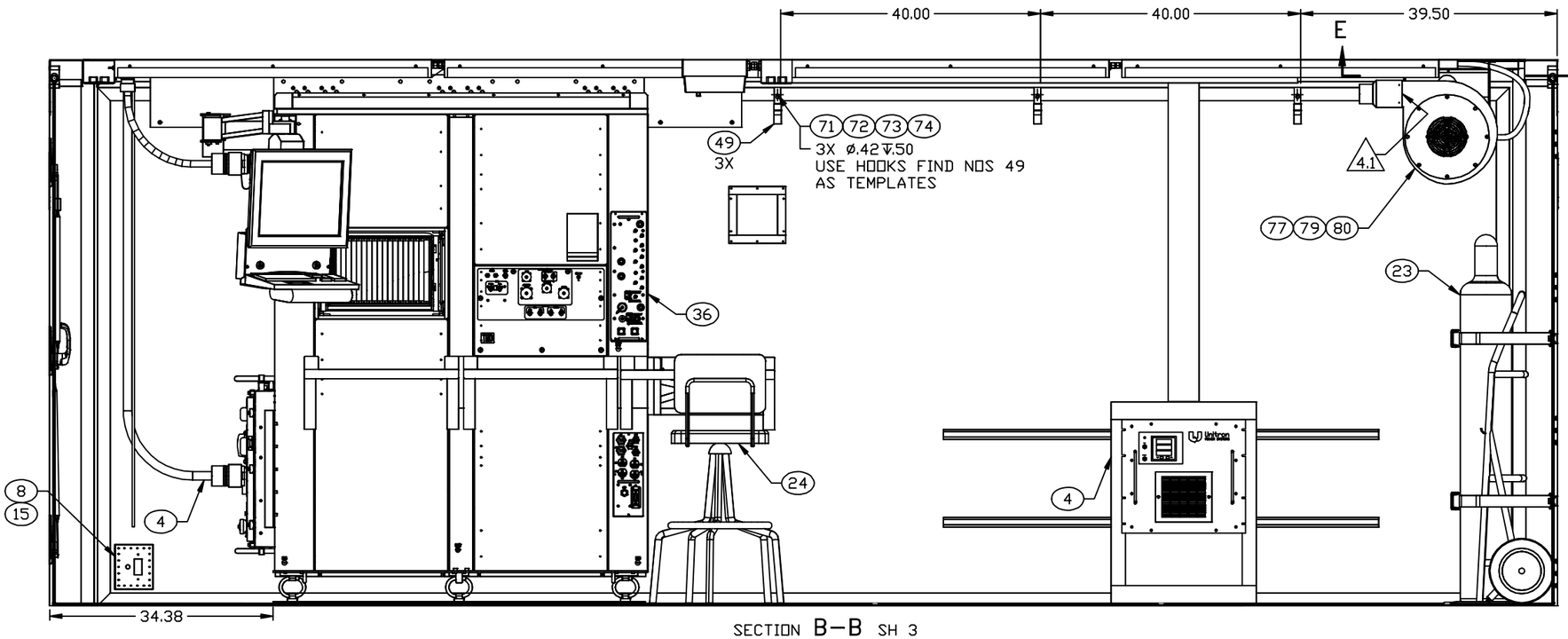

SECTION B–B SH 3
ROTATED 180°

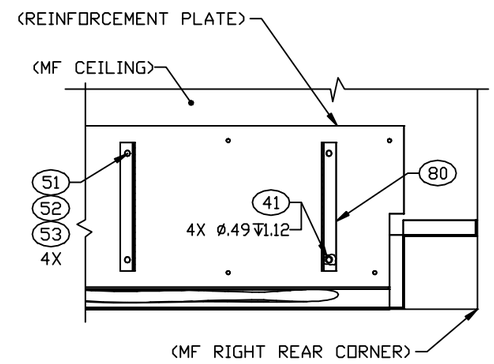

SECTION E–E
SCALE 1/4

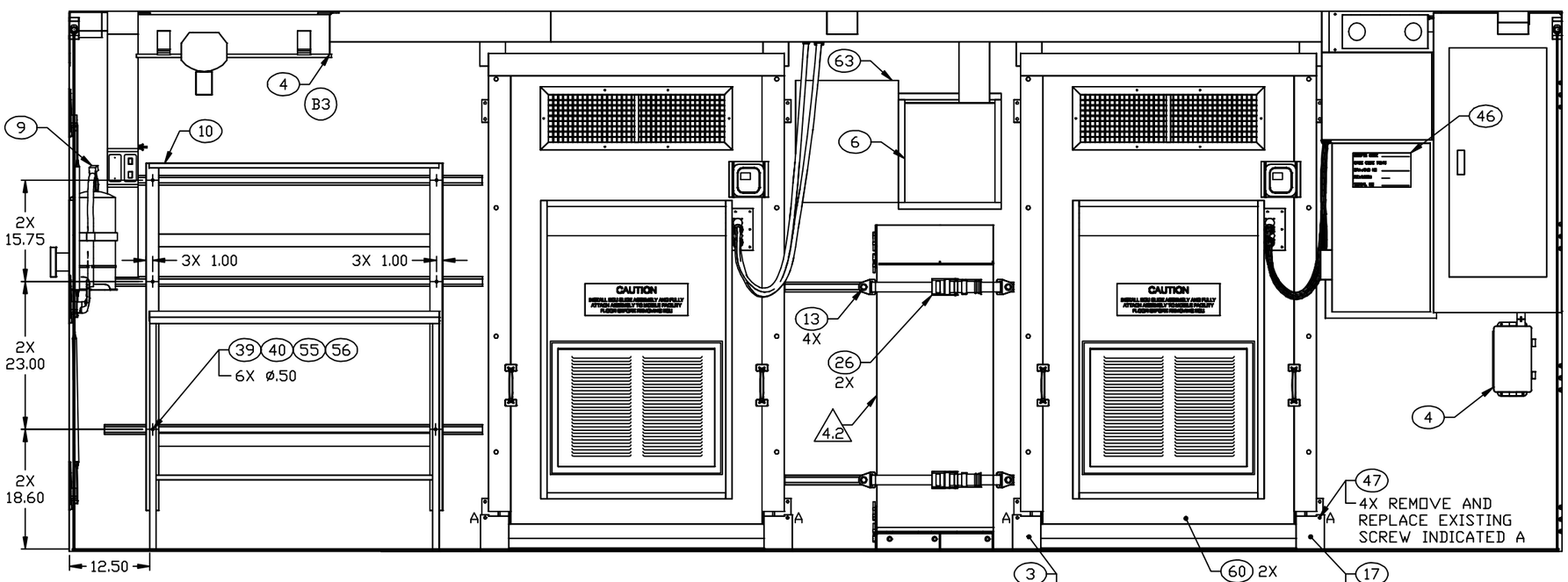

SECTION A–A SHEET 3
CHAIR NOT SHOWN

ENGINEER	DATE	DRAWER	DATE	SIZE	CAGE CODE	DRAWING NUMBER	REV
M BEUSTER	2008-07-18	MAB	2008-07-18	D	91145	MFKA170301	B
NEXT ASSEMBLY		CHECKER		SCALE		SHEET	
FINAL		PRV	2008-07-18	1/10		4	