REVISION HISTORY			
REV	DESCRIPTION	DATE	APPROVAL

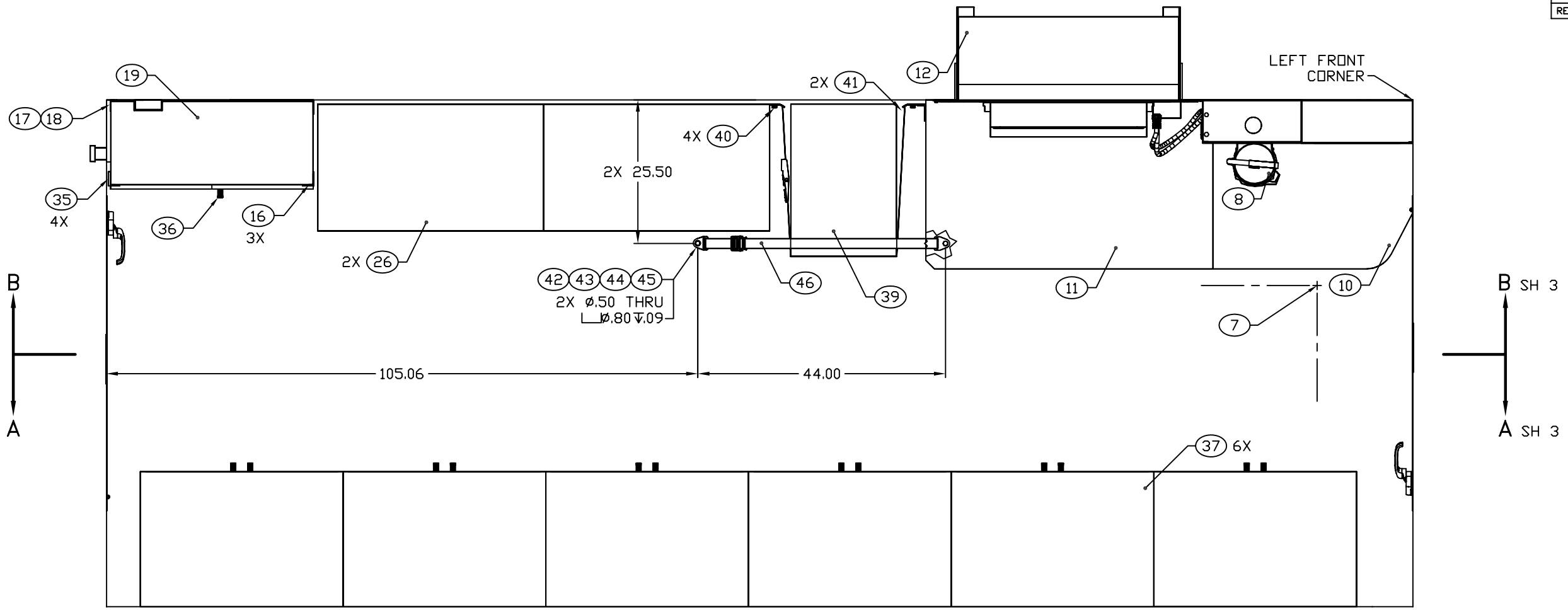

FLOOR PLAN

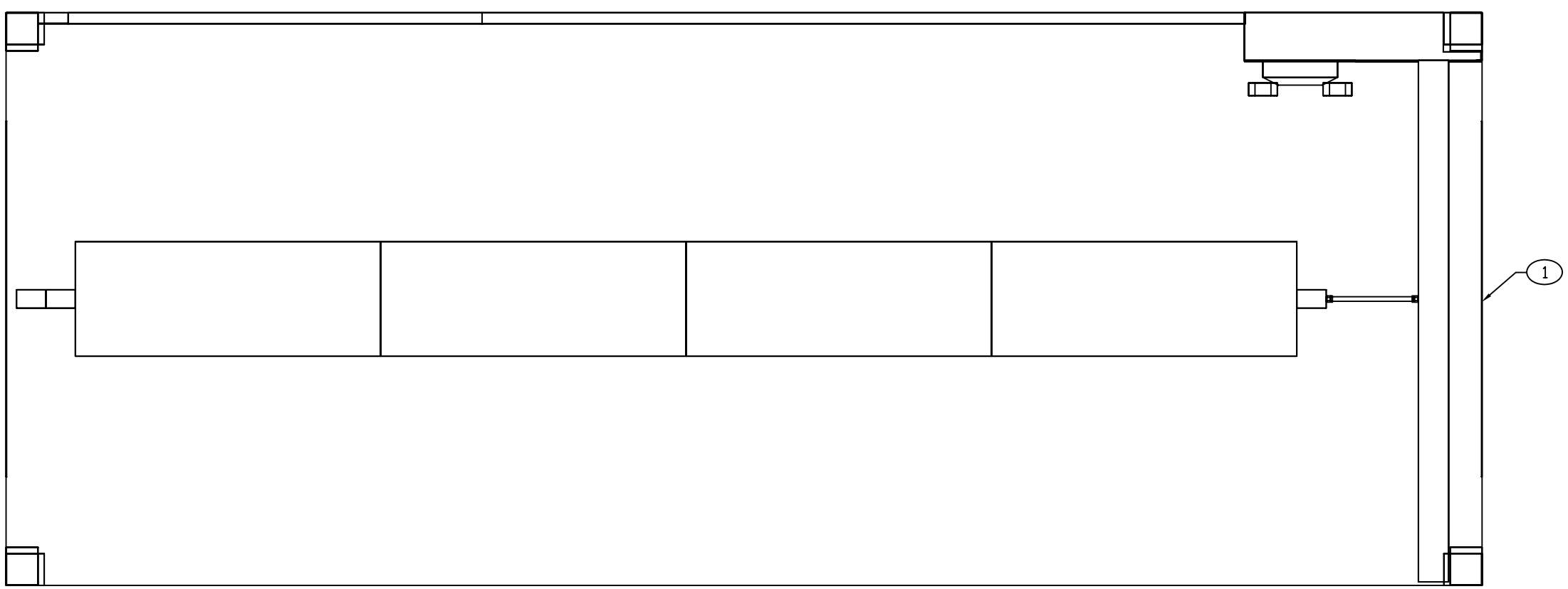

CEILING PLAN

-1

ENGINEER	DATE	DRAWN BY	DATE	SIZE	CAGE CODE	DWG NO	REV
P. VICENCIO	05-02-08	PRV	05-02-08	D	91145	MFKA140401	–
NEXT ASSEMBLY FINAL		CHECKER MAB	05-02-08	SCALE 1/11		SH 2	

REVISION HISTORY			
REV	DESCRIPTION	DATE	APPROVAL

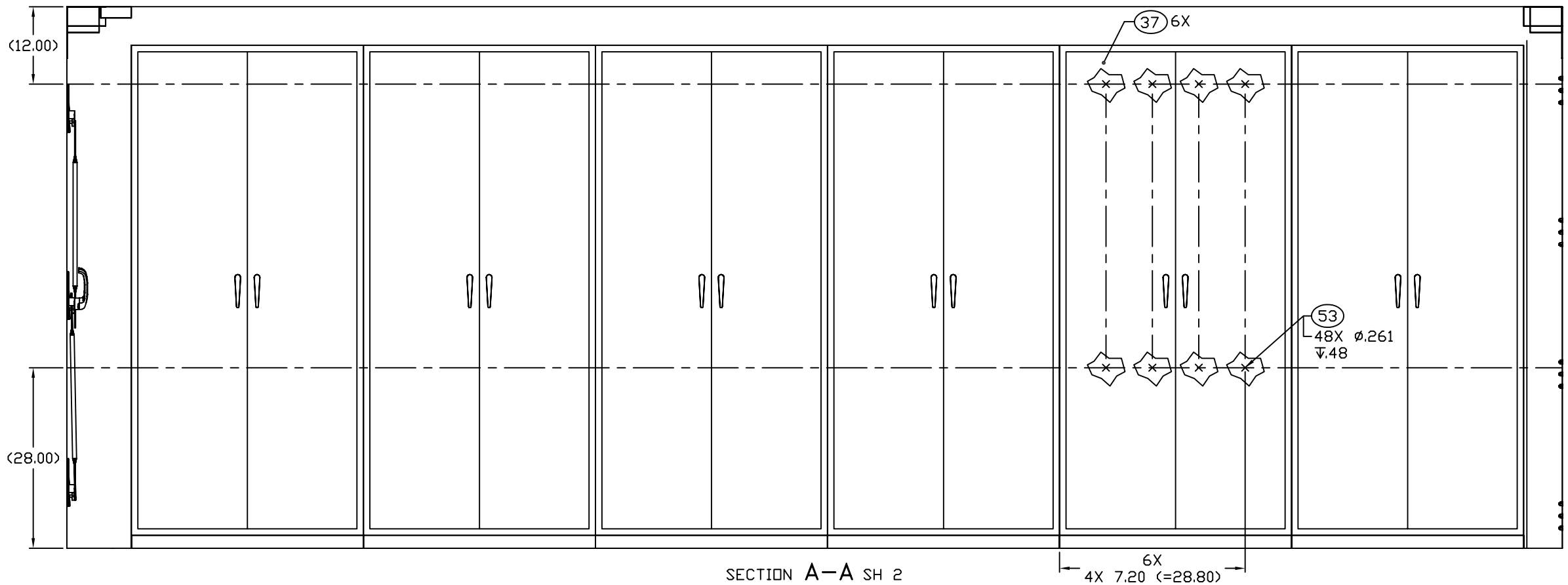

SECTION A–A SH 2
ROTATED 180°

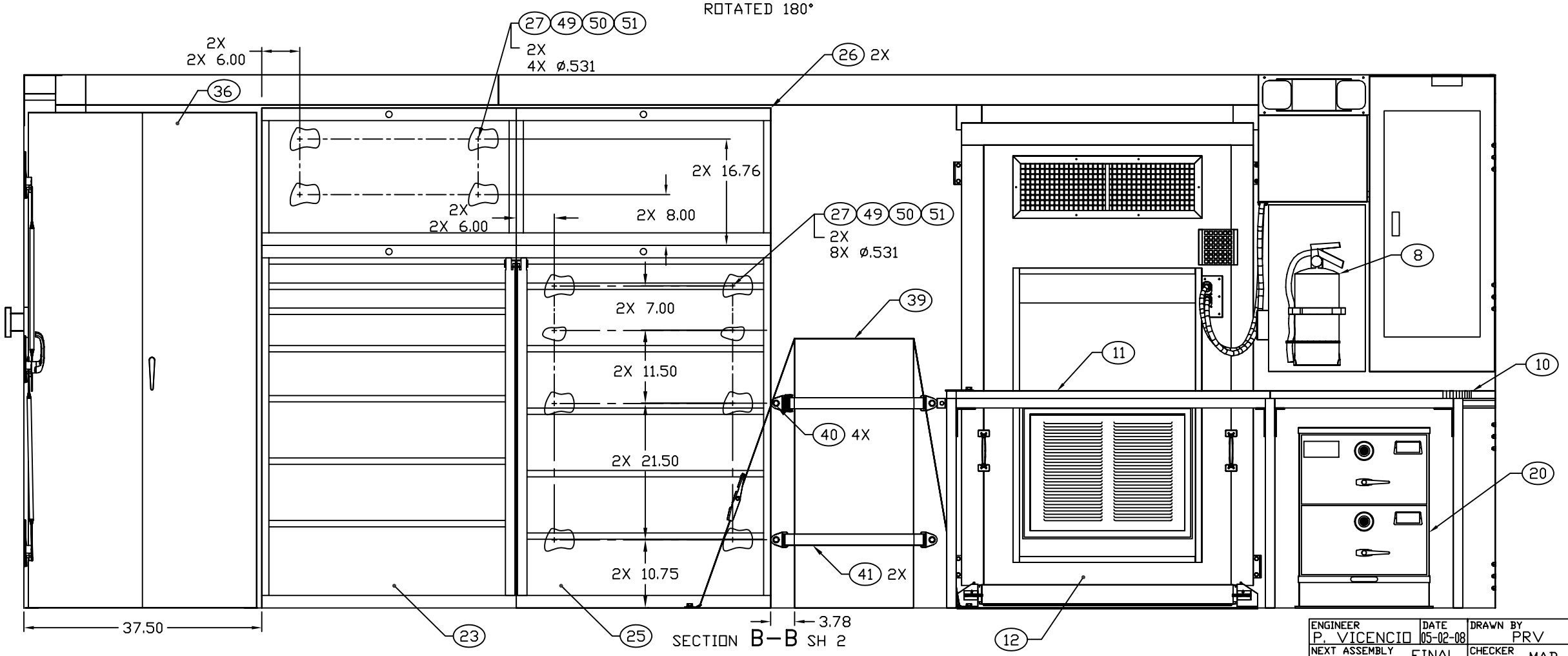

SECTION B–B SH 2

ENGINEER	DATE	DRAWN BY	DATE	SIZE	CAGE CODE	DWG NO	REV
P. VICENCIO	05-02-08	PRV	05-02-08	D	91145	MFKA140401	–
NEXT ASSEMBLY	FINAL	CHECKER MAB	05-02-08	SCALE 1/10		SH 3	

REVISION HISTORY			
REV	DESCRIPTION	DATE	APPROVAL

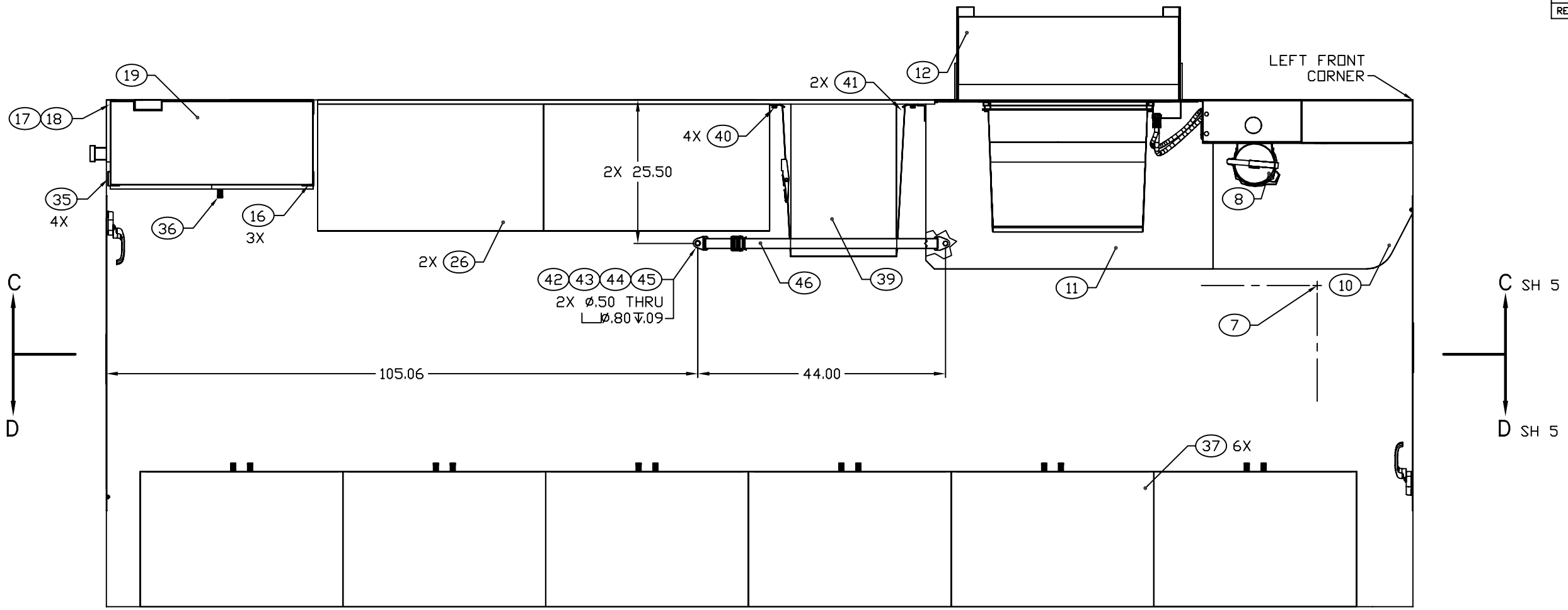

FLOOR PLAN

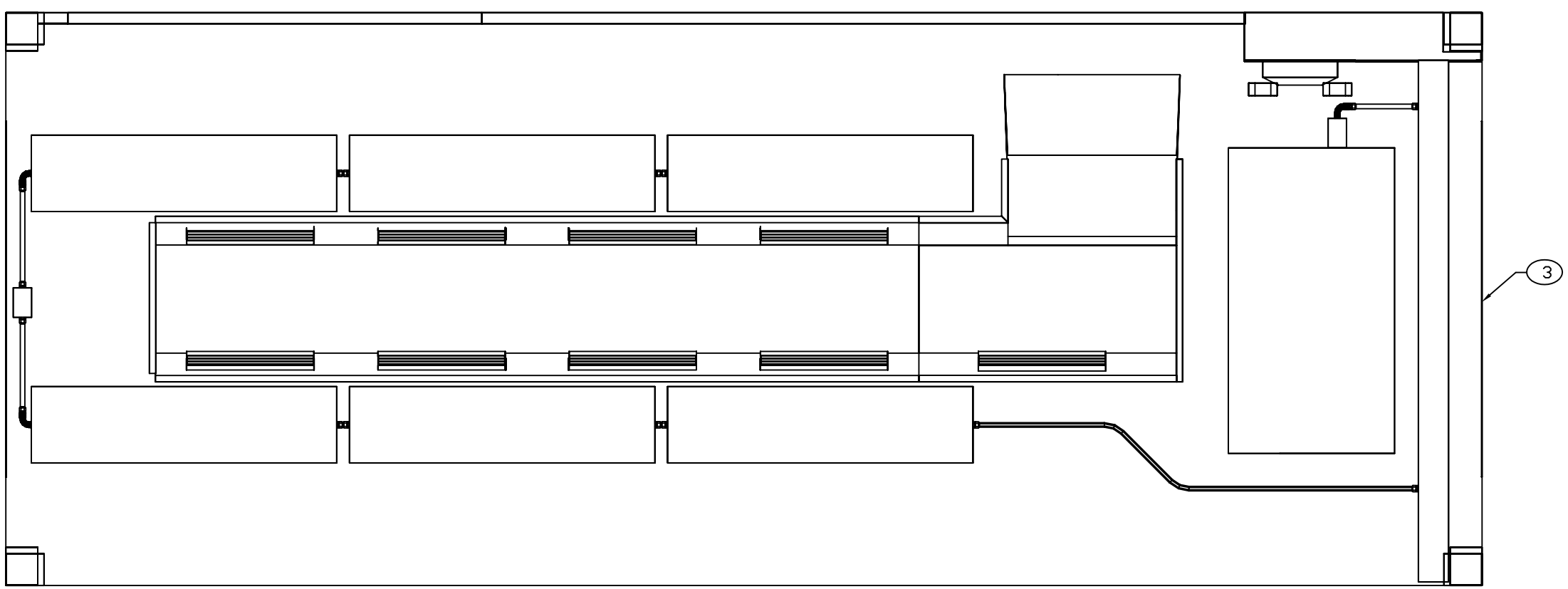

CEILING PLAN

-3

ENGINEER	DATE	DRAWN BY	DATE	SIZE	CAGE CODE	DWG NO	REV
P. VICENCIO	05-02-08	PRV	05-02-08	D	91145	MFKA140401	–
NEXT ASSEMBLY FINAL		CHECKER MAB	05-02-08	SCALE 1/11		SH 4	

REVISION HISTORY			
REV	DESCRIPTION	DATE	APPROVAL

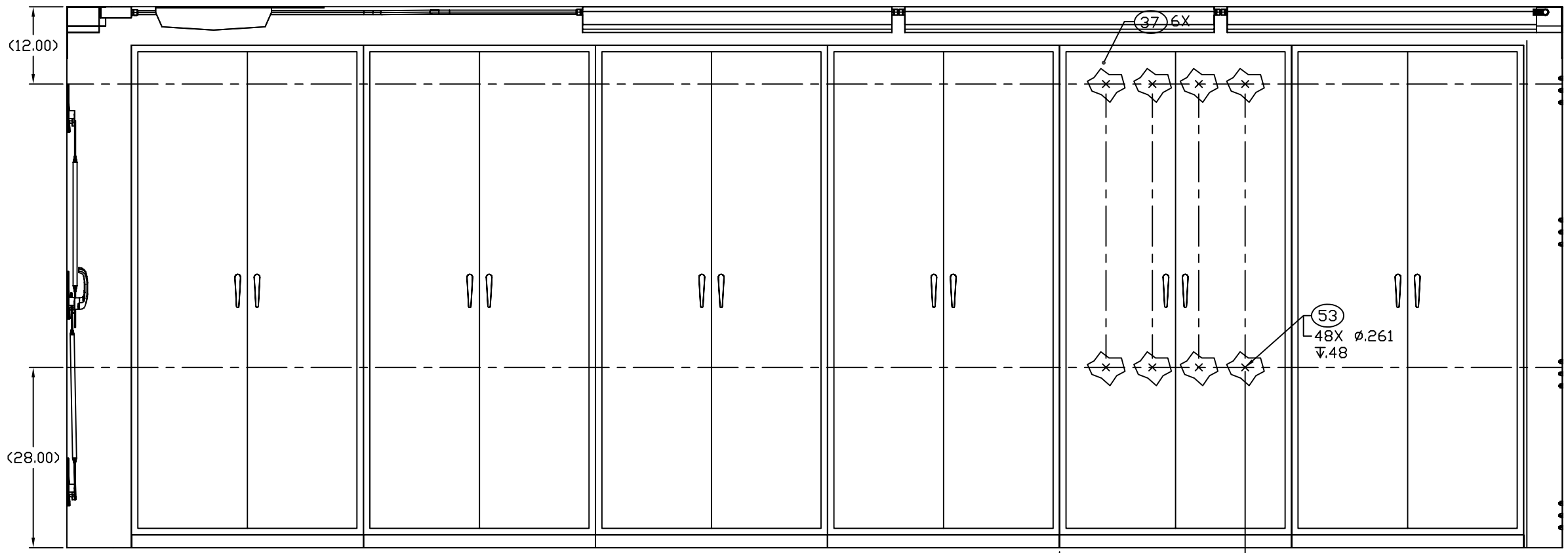

SECTION D–D SH 4
ROTATED 180°

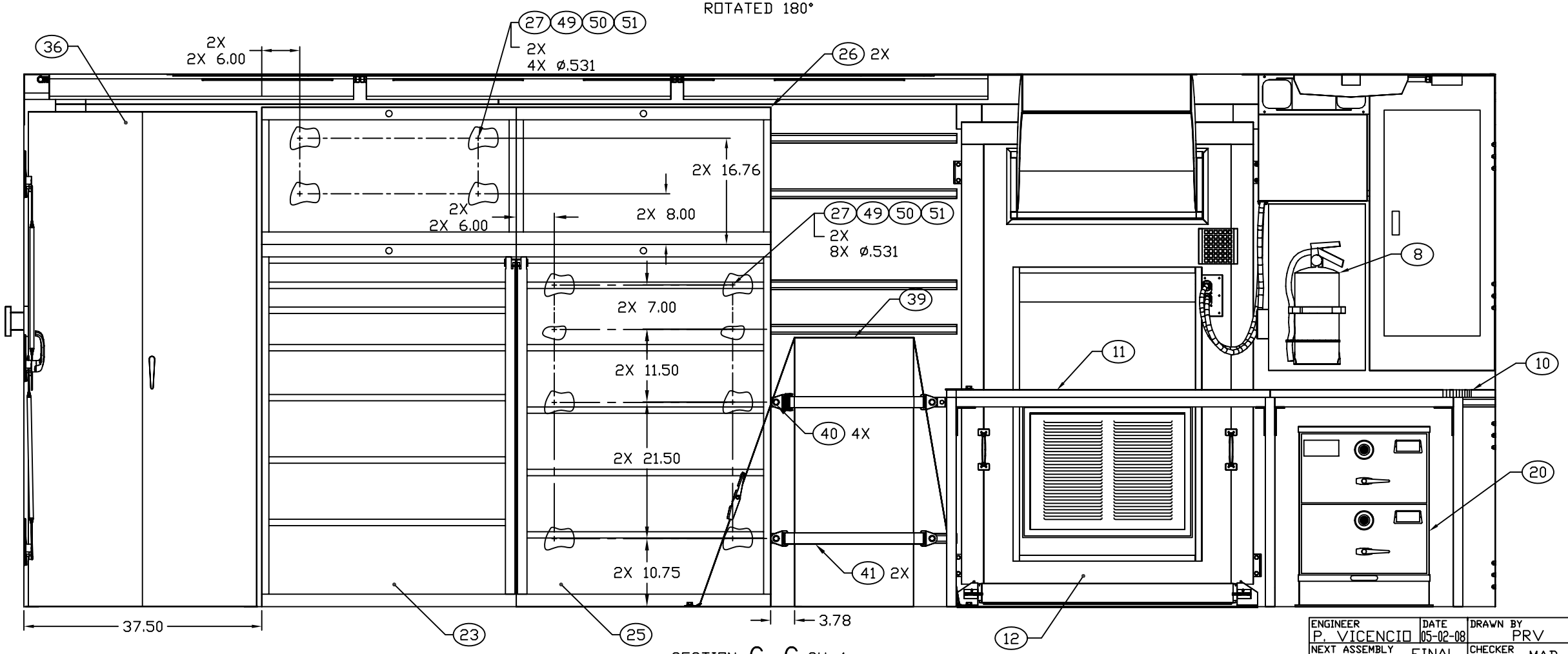

SECTION C–C SH 4

ENGINEER	DATE	DRAWN BY	DATE	SIZE	CAGE CODE	DWG NO	REV
P. VICENCIO	05-02-08	PRV	05-02-08	D	91145	MFKA140401	–
NEXT ASSEMBLY	FINAL	CHECKER	MAB				
			05-02-08	SCALE 1/10		SH 5	