REVISION HISTORY			
REV	DESCRIPTION	DATE	APPROVAL
A	(8) SECTION INDICATOR ADDED.	01-11-01	R VOTAW

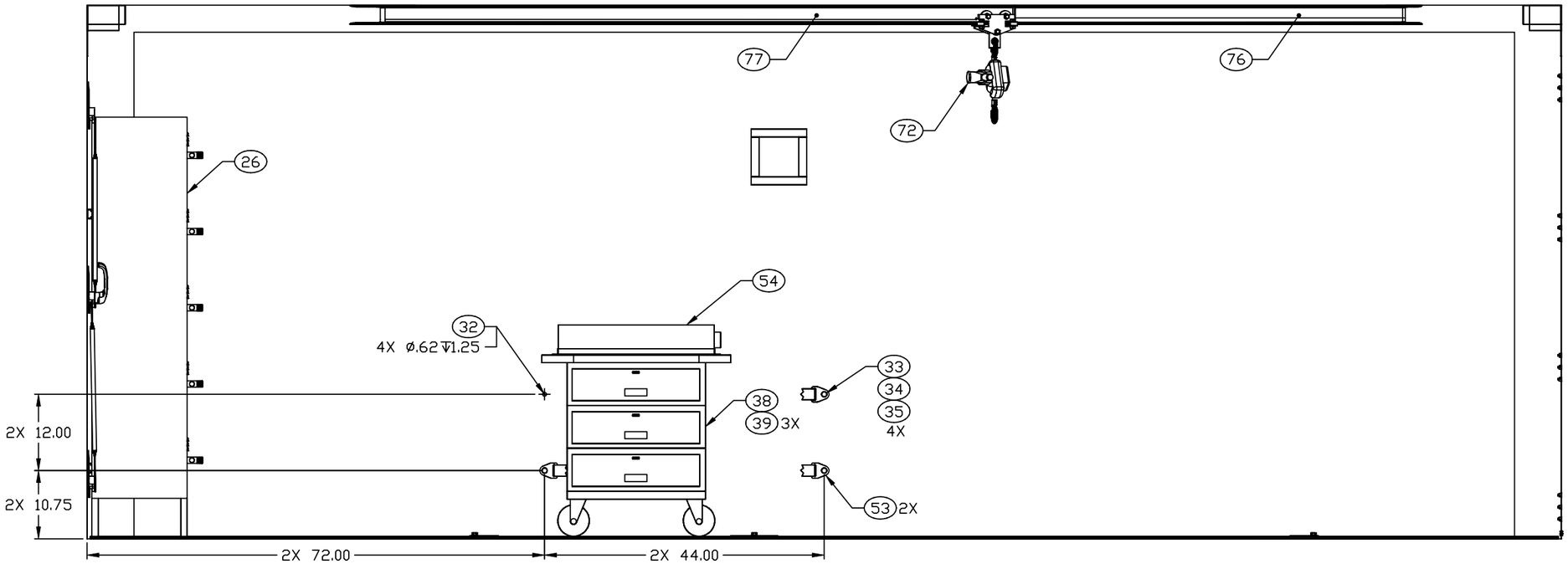

SECTION A–A SH 3
ROTATED 180°
HOLDING FIXTURE NOT SHOWN

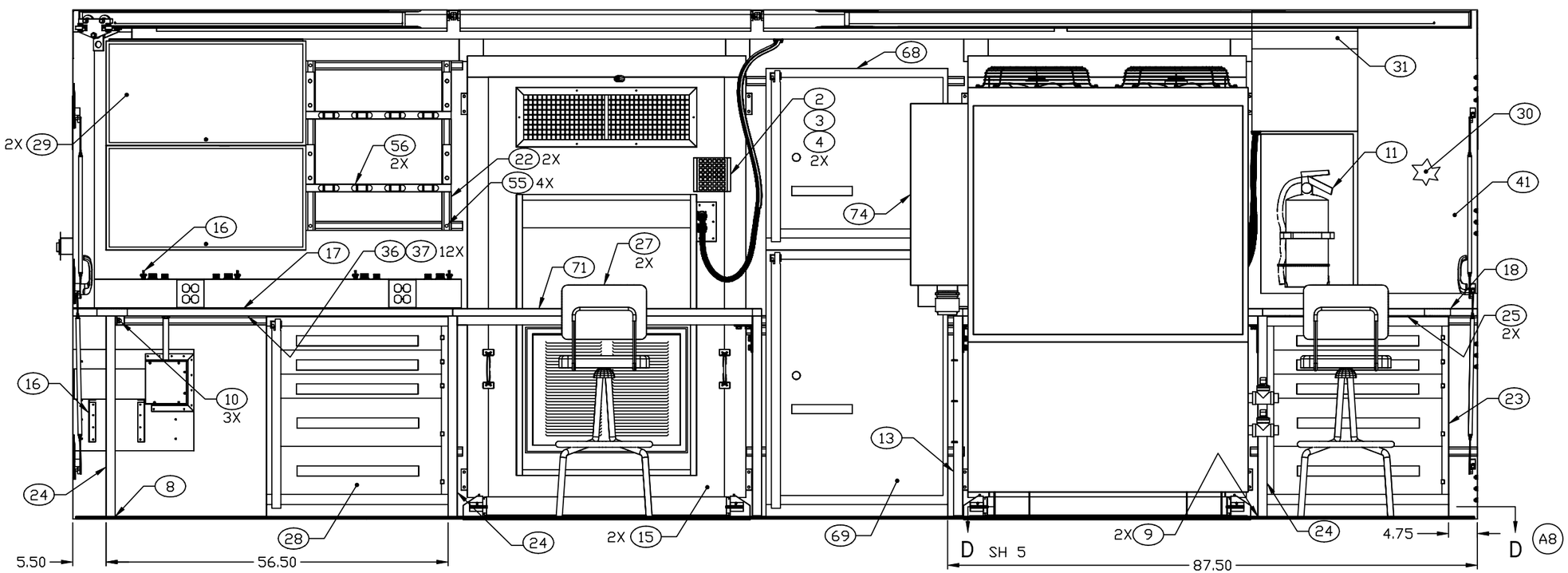

SECTION B–B SH 3
HOLDING FIXTURE NOT SHOWN

ENGINEER	DATE	DRAWER	DATE	SIZE	CAGE CODE	DRAWING NUMBER	REV
T NGUYEN	01-04-10	TN	01-10-24	D	91145	MFKA090101	A
NEXT ASSEMBLY FINAL		CHECKER MAB	01-04-10	SCALE 1/10		SHEET 4	