REVISION HISTORY			
REV	DESCRIPTION	DATE	APPROVAL
A	(1) ITEM ADDED.	99-08-25	R. A. VOTAW
B	REVISED AND PARTIALLY REDRAWN BY P. VICENCIO. (2) ITEM DELETED. (5) ITEM ADDED.	06-03-13	R. A. VOTAW
C	REVISED AND PARTIALLY REDRAWN BY P. VICENCIO. (1) LUMINAIRES REDRAWN TO MATCH ELECTRICAL DRAWING.	06-06-05	R. A. VOTAW

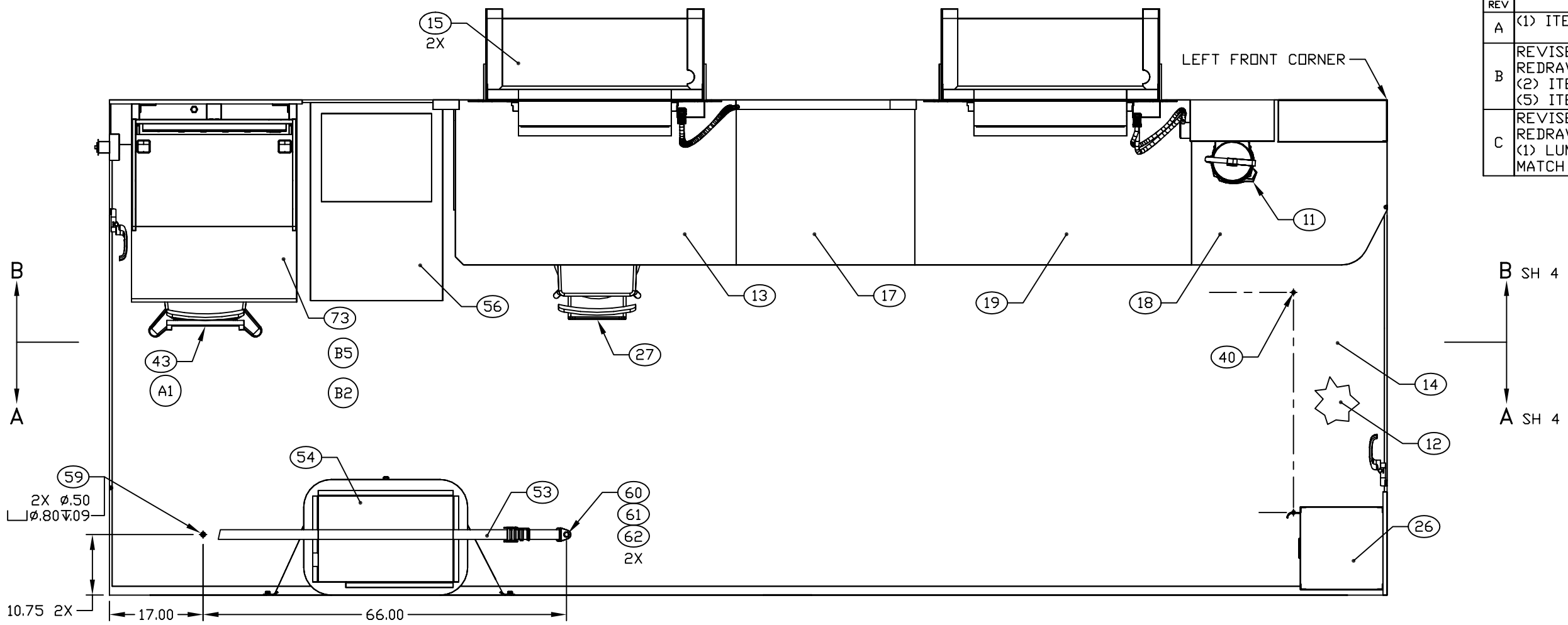

FLOOR PLAN

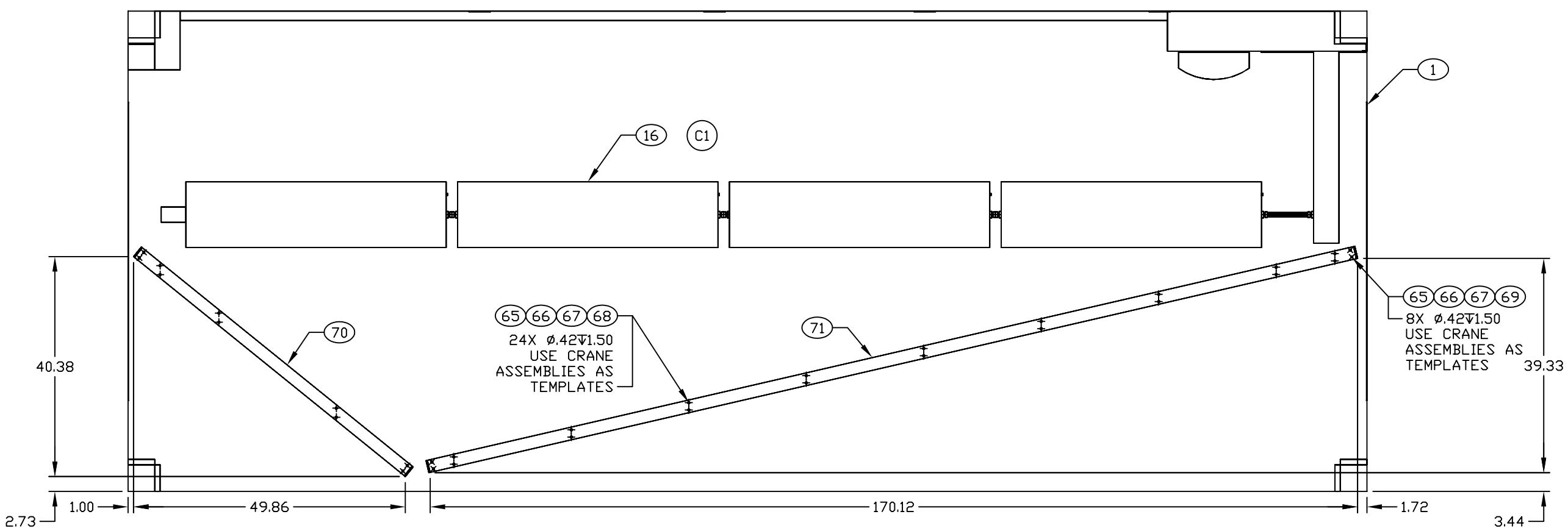

CEILING PLAN

ENGINEER	DATE	DRAWER	DATE	SIZE	CAGE CODE	DRAWING NUMBER	REV
T NGUYEN	99-03	TN	99-08-18	D	91145	MFKA070201	C
NEXT ASSEMBLY		CHECKER		SCALE		SHEET	
FINAL		MAB	99-03-22	1/11		3	

REVISION HISTORY			
REV	DESCRIPTION	DATE	APPROVAL
A	(1) ITEM ADDED. (3) QUANTITY CHANGED. (4) ITEM LOCATION CLARIFIED. (5) ITEM LOCATION CORRECTED.	99-08-25	R. A. VOTAW
B	REVISED AND PARTIALLY REDRAWN BY P. VICENCIO. (2) ITEM DELETED. (5) ITEM ADDED.	06-03-13	R. A. VOTAW

NOTE:

4.1 MEASURE FROM TOP OF FLOOR COVERING, FIND NO 14.

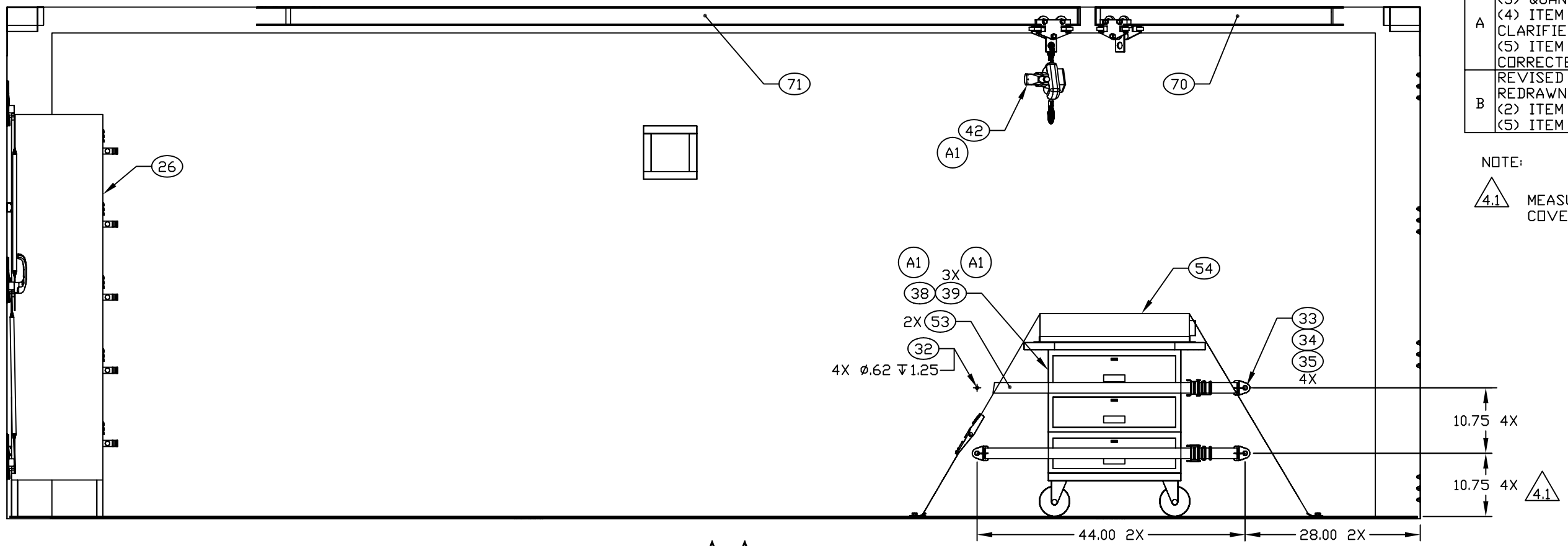

SECTION A–A SH 3
ROTATED 180°

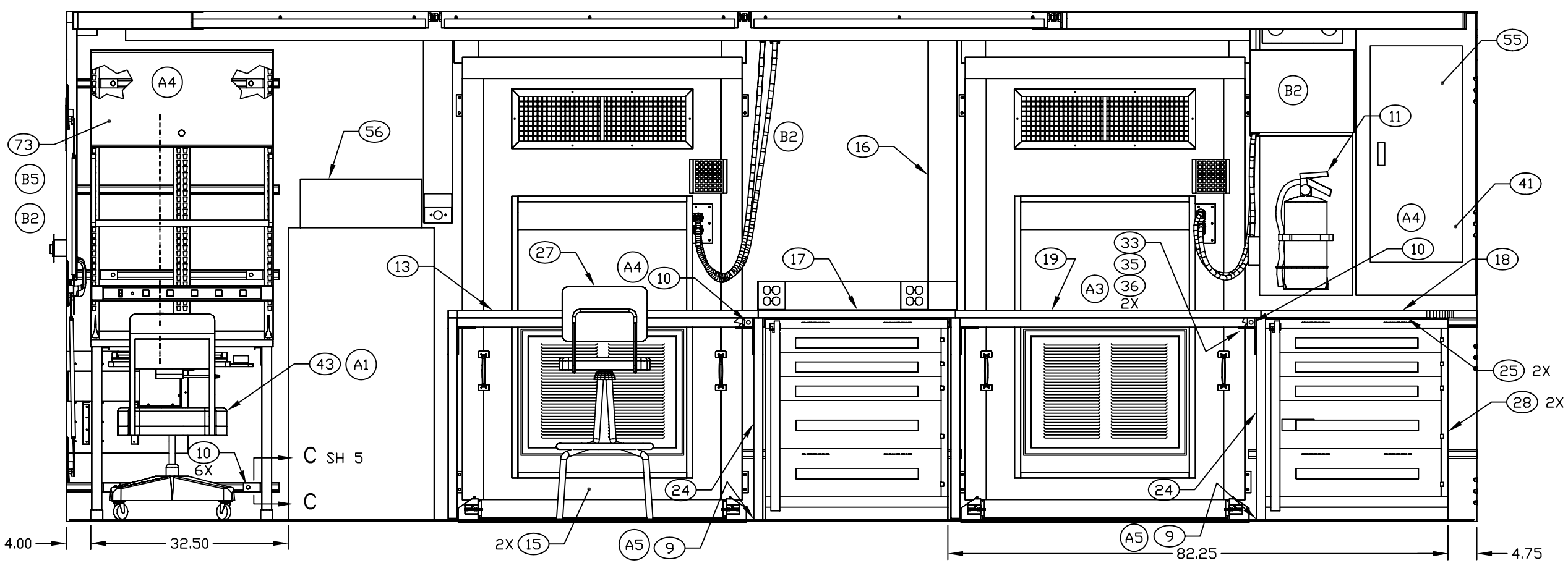

SECTION B–B SH 3

ENGINEER	DATE	DRAWER	DATE	SIZE	CAGE CODE	DRAWING NUMBER	REV
T NGUYEN	99-03	TN	99-08-18	D	91145	MFKA070201	B
NEXT ASSEMBLY		CHECKER		SCALE		SHEET	
FINAL		MAB	99-03-22	1/10		4	