REVISION HISTORY			
REV	DESCRIPTION	DATE	APPROVAL
D	(1) FIND NUMBER CHANGED.	96-11	R. VOTAW
F	(1) ITEM ADDED. (3) NOTE ADDED. (8) DIMENSION CHANGED.	98-04-28	R. VOTAW

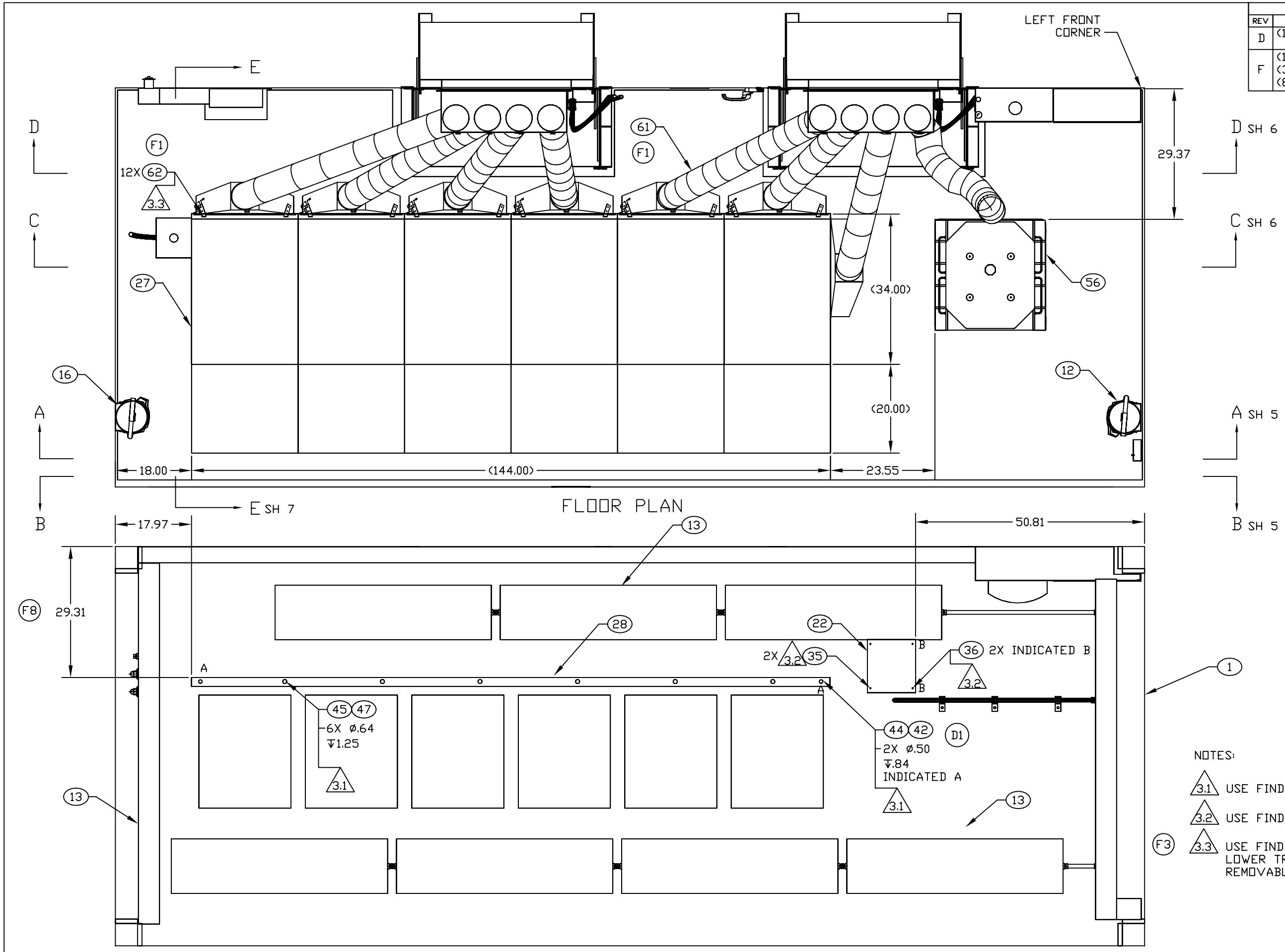

NOTES:

3.1 USE FIND NO 28 AS TEMPLATE TO LOCATE HOLES.

3.2 USE FIND NO 22 AS TEMPLATE TO LOCATE HOLES.

F3 3.3 USE FIND NO 62, MACHINE SCREW, TO SECURE LOWER TRANSITION COOLING DUCT TO THE REMOVABLE PANEL OF THE CASS TEST STATION.

ENGINEER	DATE	DRAWER	DATE	SIZE	CAGE CODE	DRAWING NUMBER	REV
P. VICENCIO	96-04-25	PRV	98-04-18	D	91145	MFKA060401	F
NEXT ASSEMBLY		CHECKER		SCALE		SHEET	
FINAL		MAB	96-01-10	1/11		3	

REVISION HISTORY			
REV	DESCRIPTION	DATE	APPROVAL
B	REDRAWN WITH CHANGES.	96-05	R. VOTAW
F	(1) ITEM ADDED.	98-04-27	R. VOTAW

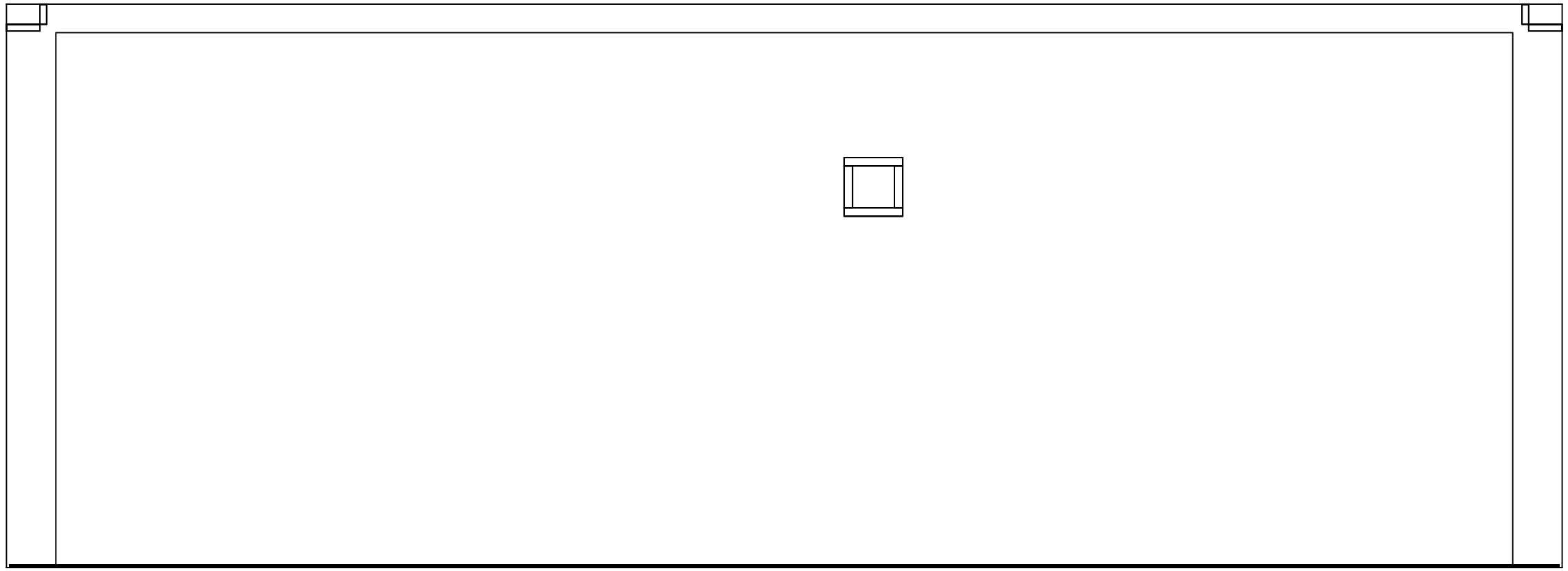

SECTION B-B SH 3
ROTATED 180°

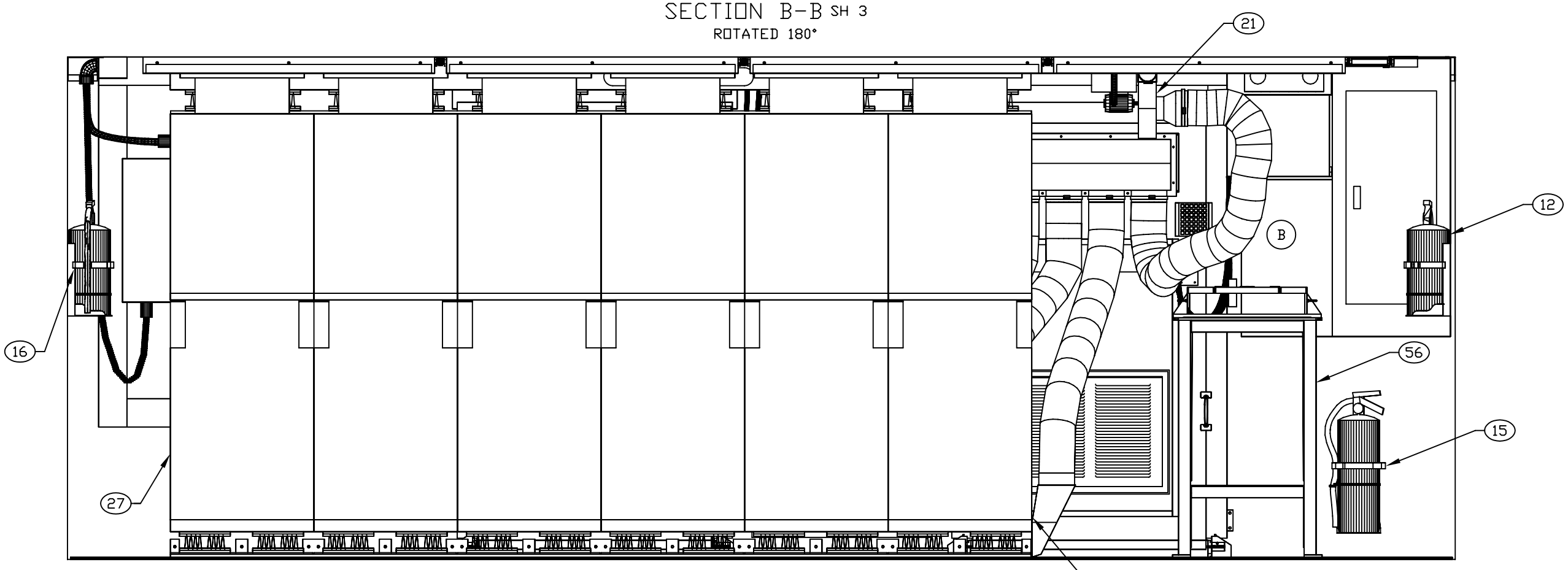

SECTION A-A SH 3

ENGINEER	DATE	DRAWER	DATE	SIZE	CAGE CODE	DRAWING NUMBER	REV
P. VICENCIO	96-04-25	PRV	98-04-18	D	91145	MFKA060401	F
NEXT ASSEMBLY FINAL		CHECKER MAB	96-01-10	SCALE 1/10		SHEET 5	

REVISION HISTORY

REVISION HISTORY			
REV	DESCRIPTION	DATE	APPROVAL
B	REDRAWN WITH CHANGES.	96-05	R. VOTAW
F	(1) ITEM ADDED.	98-04-27	R. VOTAW
G	(1) ITEM ADDED. (2) NOTE ADDED.	02-06-13	R. VOTAW
J	REVISED AND PARTIALLY REDRAWN BY P. VICENCIO. (1) ITEM DELETED.	06-02-01	R. VOTAW

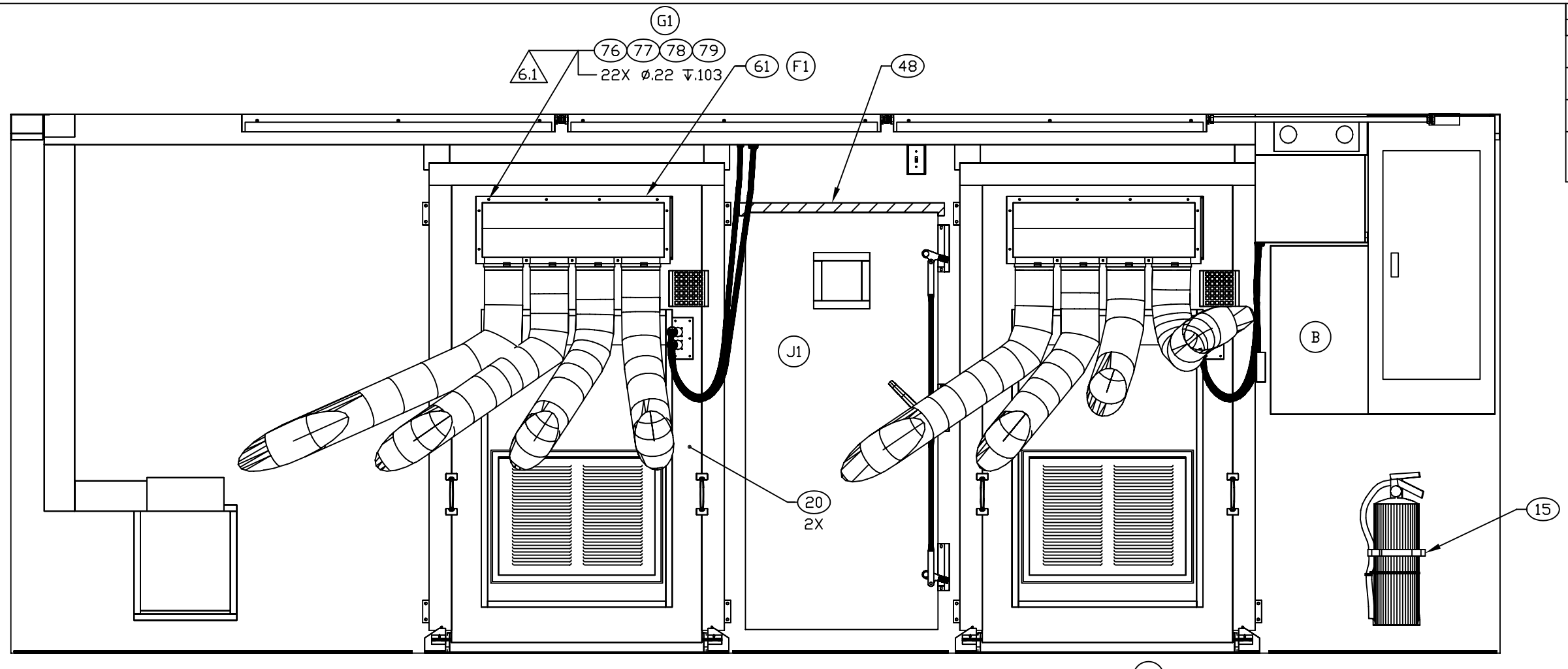

SECTION D-D SH 3

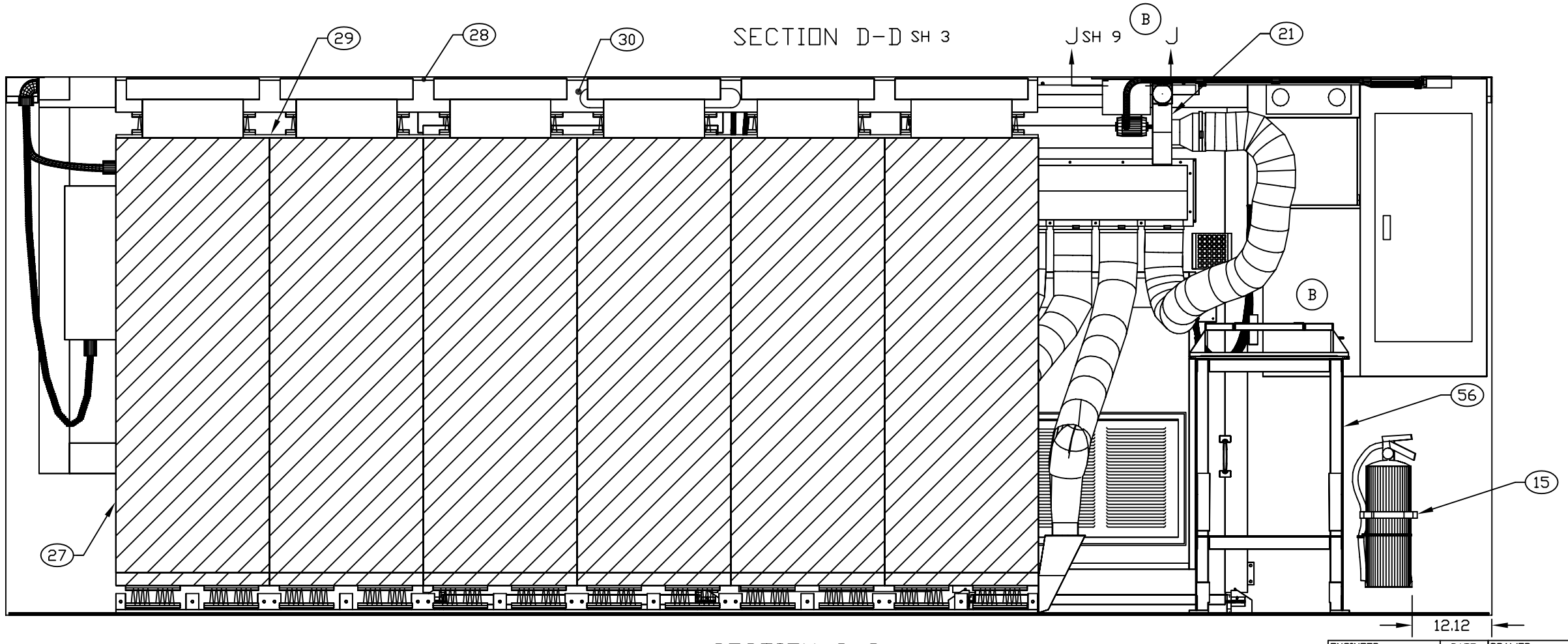

SECTION C-C SH 3

NOTE:

6.1 CENTER UPPER TRANSITION COOLING DUCT OVER CUTOUT. USE UPPER TRANSITION COOLING DUCT AS TEMPLATE TO LOCATE HOLES.

G2

ENGINEER	DATE	DRAWER	DATE	SIZE	CAGE CODE	DRAWING NUMBER	REV
P. VICENCIO	96-04-25	PRV	02-06-11	D	91145	MFKA060401	J
NEXT ASSEMBLY FINAL		CHECKER MAB	96-01-10	SCALE 1/10		SHEET 6	