REVISION HISTORY			
REV	DESCRIPTION	DATE	APPROVAL
B	FIND NUMBER DELETED. FIND NUMBER CHANGED.	96-12-19	R. VOTAW
C	(2) ITEM DELETED. (3) ITEM ADDED.	97-08-27	L. BJURMAN
D	(5) ITEM ADDED.	98-02-03	R. VOTAW

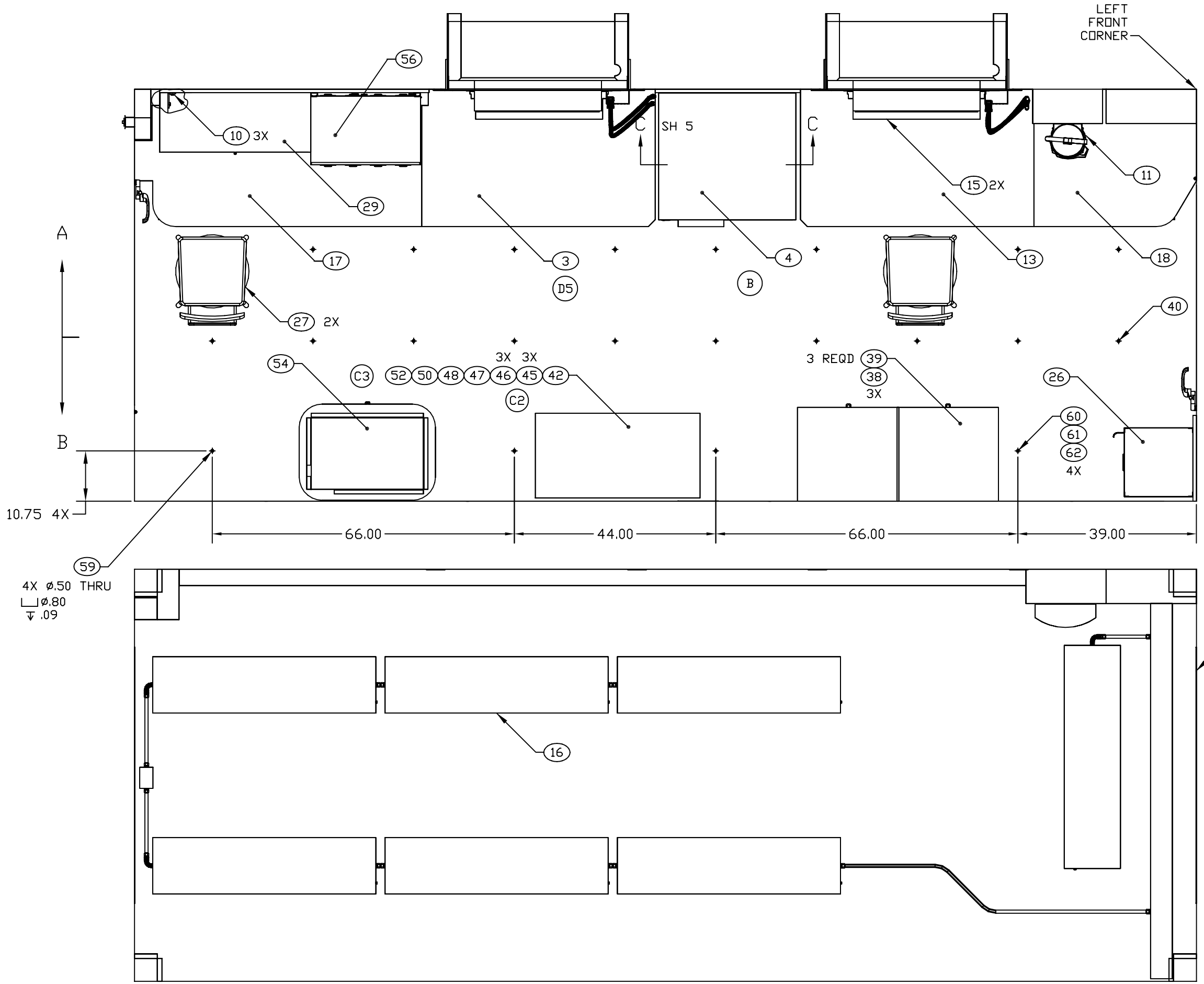

ENGINEER	DATE	DRAWER	DATE	SIZE	CAGE CODE	DRAWING NUMBER	REV
P. VICENCIO	96-01-10	PRV	97-12-11	D	91145	MFKA030101	D
NEXT ASSEMBLY		CHECKER		SCALE		SHEET	
FINAL		MAB	96-01-18	1/11		3	

REVISION HISTORY			
REV	DESCRIPTION	DATE	APPROVAL
B	FIND NUMBER DELETED. FIND NUMBER CHANGED.	96-12-19	R. VOTAW
C	(2) ITEM DELETED. (3) ITEM ADDED.	97-08-27	L. BJURMAN
D	(5) ITEM ADDED.	98-02-03	R. VOTAW
E	REVISED AND PARTIALLY REDRAWN BY P. VICENCIO. (1) ITEM DELETED.	06-02-09	R. VOTAW
F	REVISED AND PARTIALLY REDRAWN BY P. VICENCIO. (1) ITEM DELETED.	06-03-01	R. VOTAW

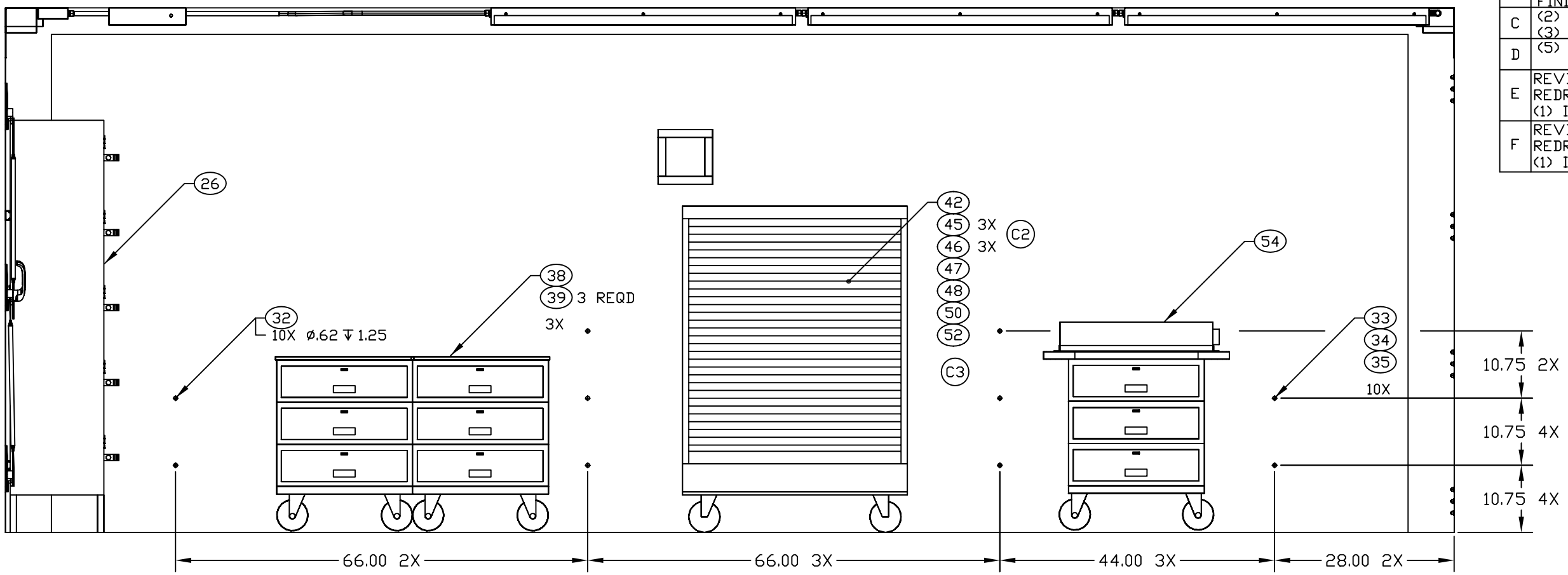

SECTION B-B SH 3
ROTATED 180°

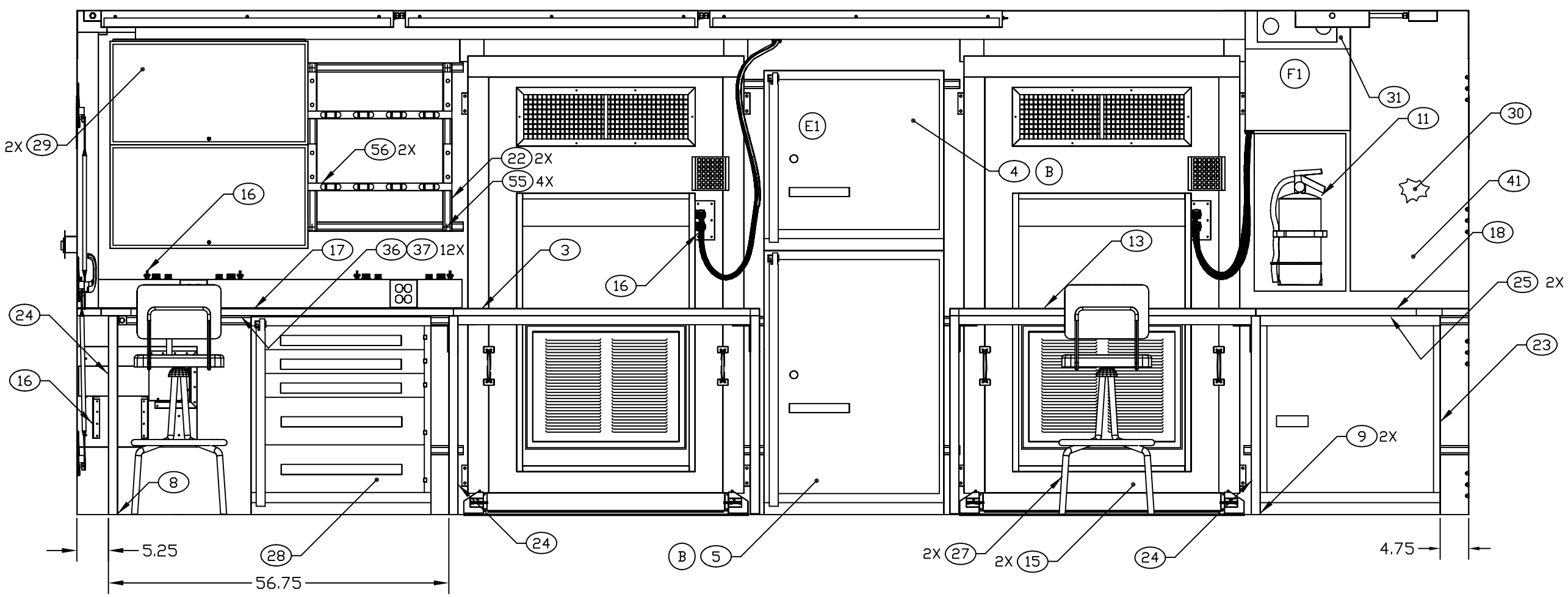

SECTION A-A SH 3

ENGINEER	DATE	DRAWER	DATE	SIZE	CAGE CODE	DRAWING NUMBER	REV
P. VICENCIO	96-01-10	PRV	97-12-11	D	91145	MFKA030101	F
NEXT ASSEMBLY		CHECKER		SCALE		SHEET	
FINAL		MAB	96-01-18	1/10		4	