REVISIONS			
REV	DESCRIPTION	DATE	APPROVAL
B	(1) FIND NUMBER CHANGED.	96-11-18	R. A. VOTAW
C	(3) ITEM ADDED. (4) NOTE ADDED.		

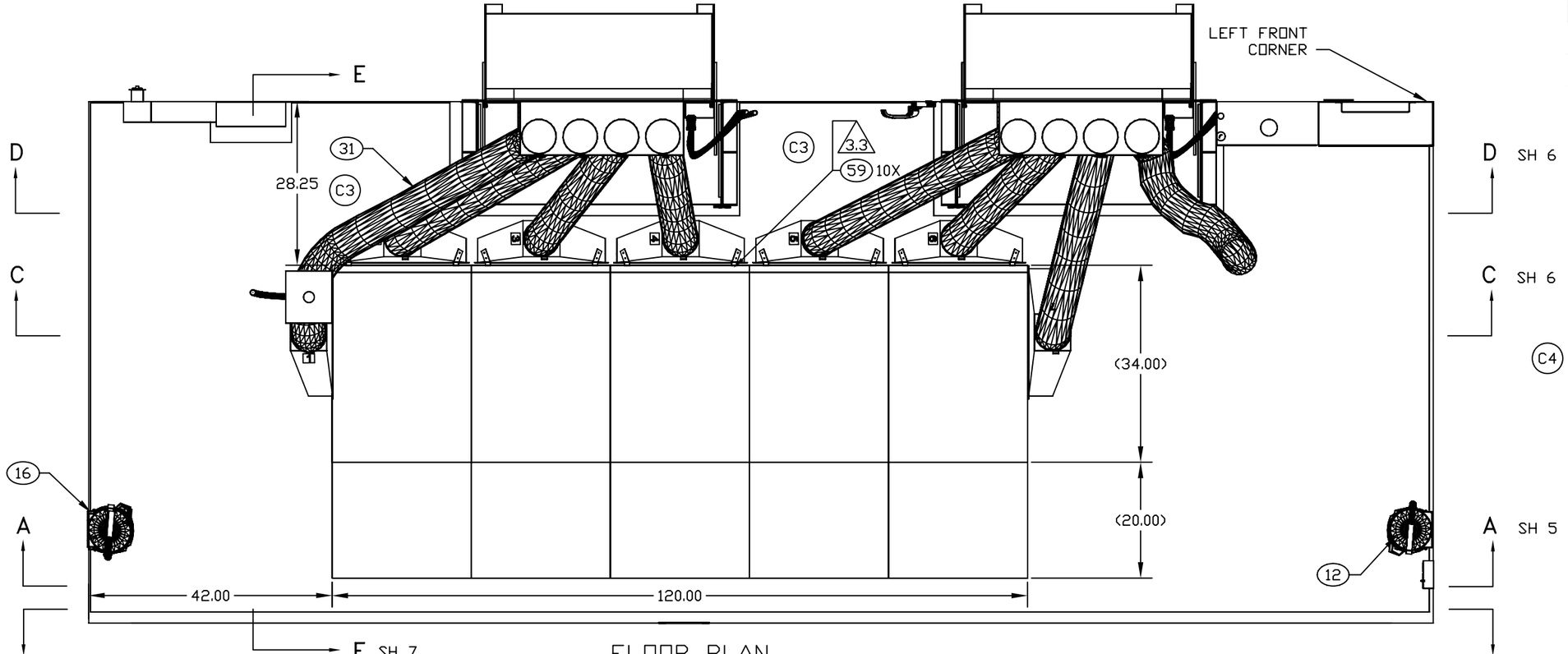

FLOOR PLAN

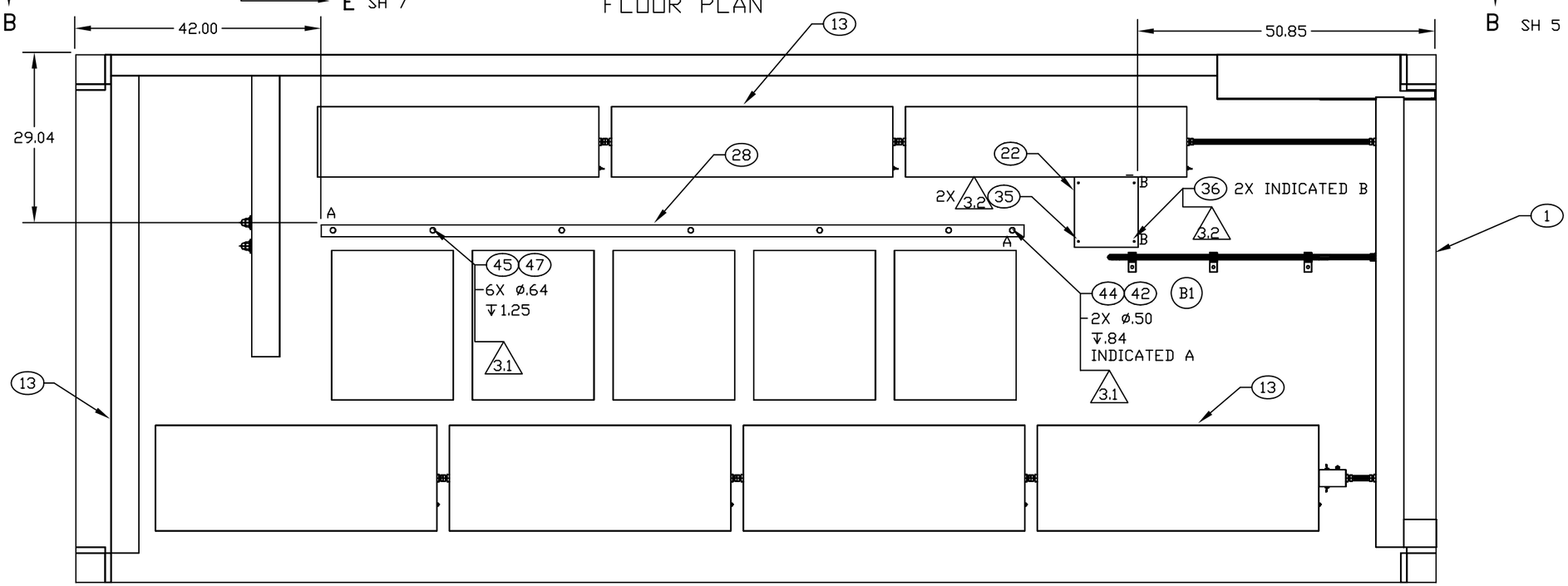

CEILING PLAN

NOTES:

3.1 USE FIND NO 28 AS TEMPLATE TO LOCATE HOLES.

3.2 USE FIND NO 22 AS TEMPLATE TO LOCATE HOLES.

C4 3.3 USE FIND NO 59, MACHINE SCREW, TO SECURE LOWER TRANSITION COOLING DUCT TO THE BASE OF THE CASS TEST STATION.

ENGINEER	DATE	DRAWER	DATE	SIZE	CAGE CODE	DRAWING NUMBER	REV
P. VICENCIO	96-03-22	PRV	98-09-25	D	91145	MFKA020201	C
NEXT ASSEMBLY		CHECKER		SCALE		SHEET	
FINAL		MAB	96-04-19	1/11		3	

REVISIONS			
REV	DESCRIPTION	DATE	APPROVAL
C	(3) ITEM ADDED. (5) DIMENSION ADDED.		

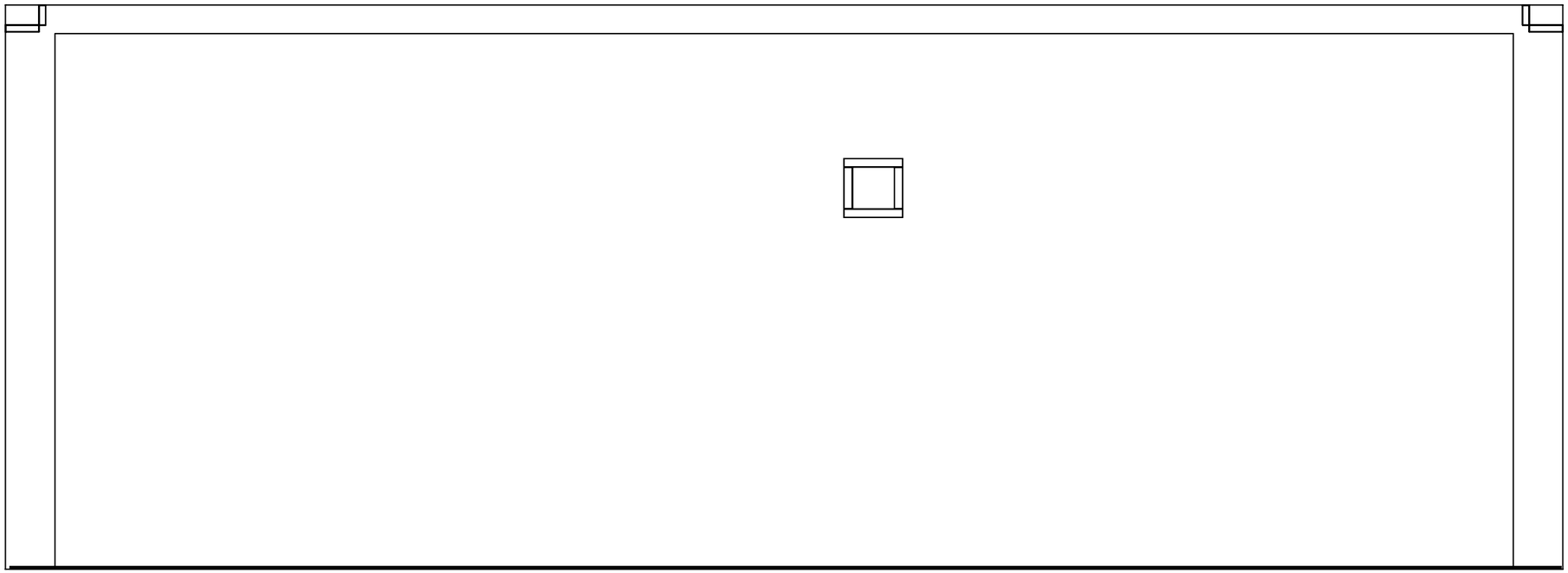

SECTION B–B SH 3
ROTATED 180°

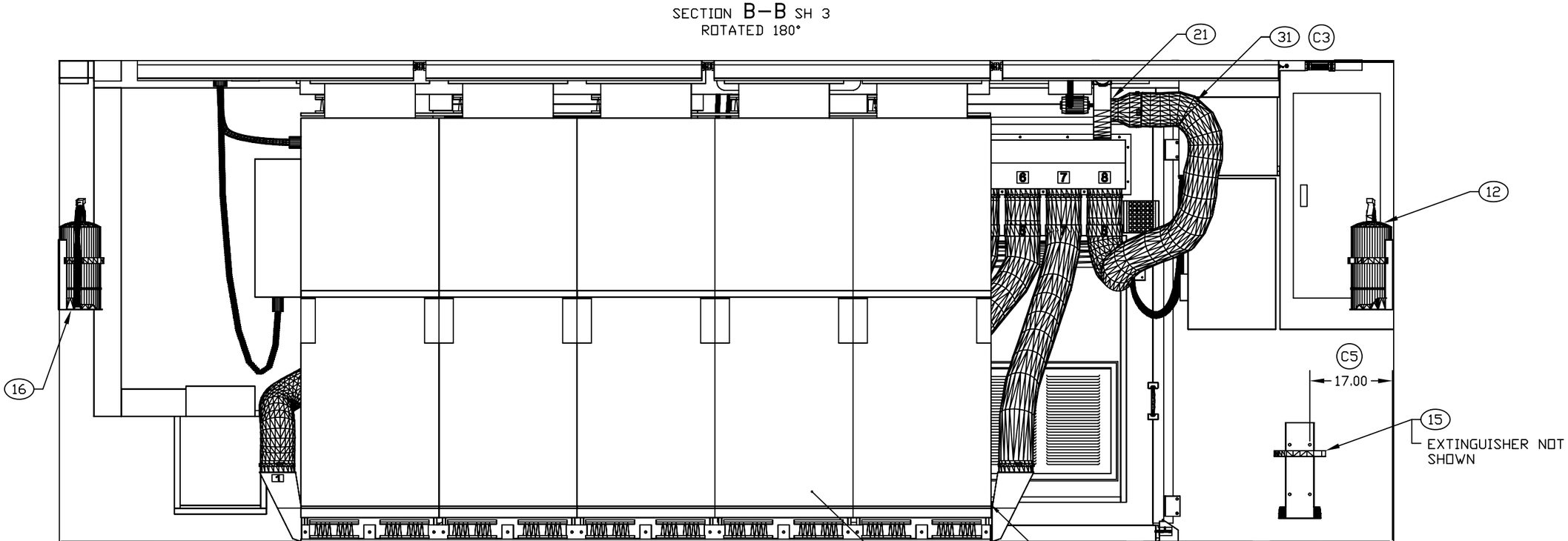

SECTION A–A SH 3

ENGINEER	DATE	DRAWER	DATE	SIZE	CAGE CODE	DRAWING NUMBER	REV
P. VICENCIO	96-03-22	PRV	98-09-25	D	91145	MFKA020201	C
NEXT ASSEMBLY FINAL		CHECKER MAB	96-05	SCALE 1/10		SHEET 5	

REVISIONS			
REV	DESCRIPTION	DATE	APPROVAL
C	(3) ITEM ADDED.		

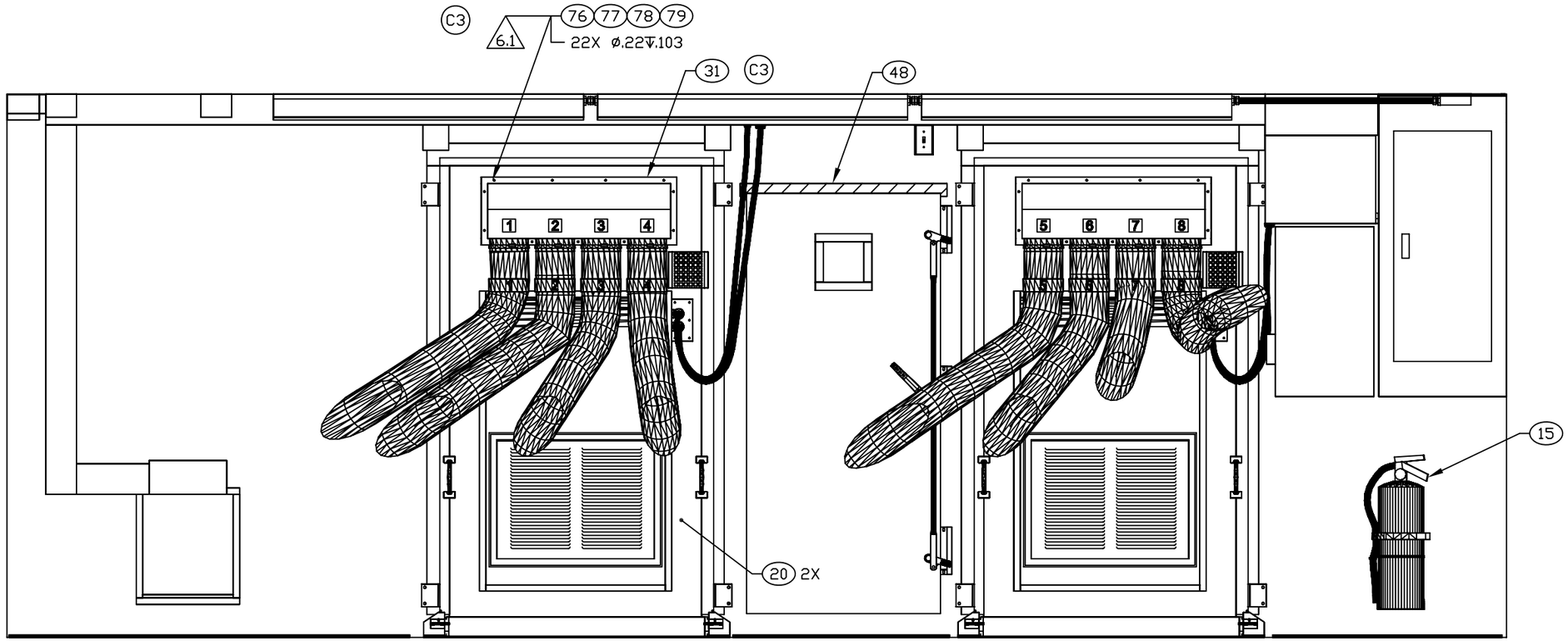

SECTION D–D SH 3

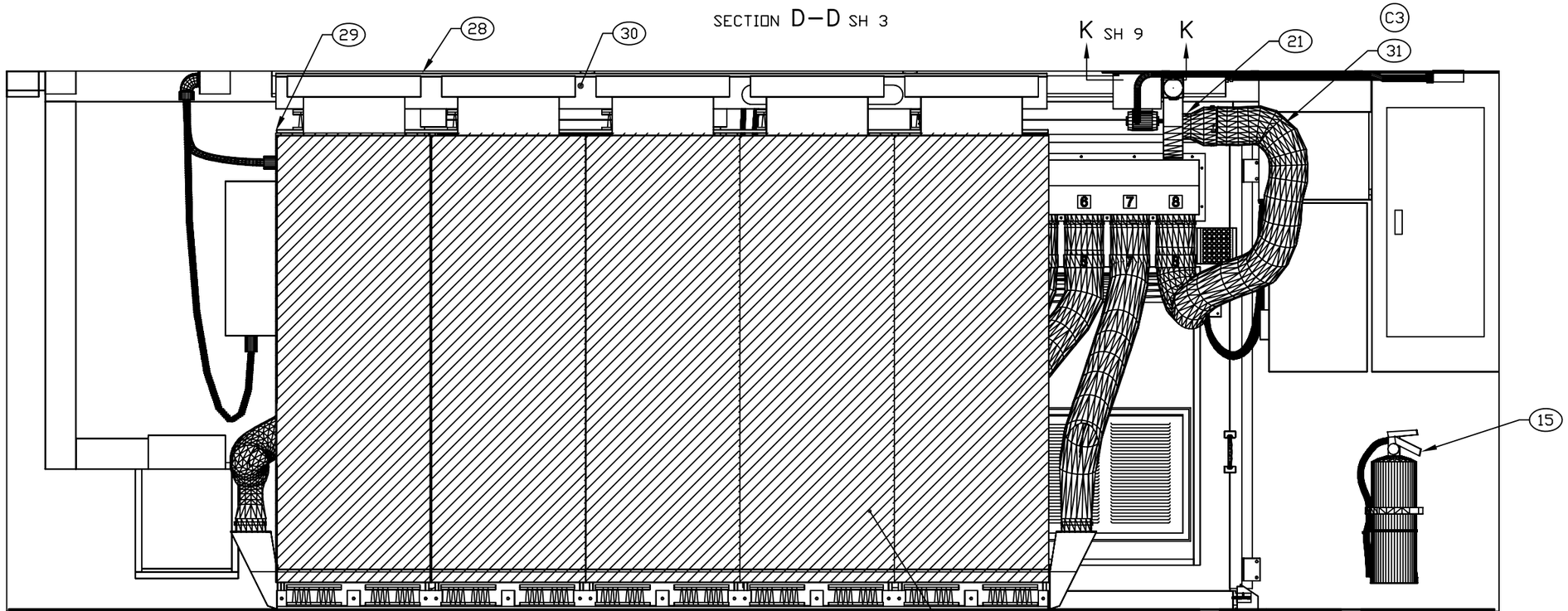

SECTION C–C SH 3

NOTE:

6.1 CENTER UPPER TRANSITION COOLING DUCT OVER CUTOUT. USE UPPER TRANSITION COOLING DUCT AS TEMPLATE TO LOCATE HOLES.

ENGINEER	DATE	DRAWER	DATE	SIZE	CAGE CODE	DRAWING NUMBER	REV
P. VICENCIO	96-03-22	PRV	98-09-25	D	91145	MFKA020201	C
NEXT ASSEMBLY FINAL		CHECKER MAB	96-05	SCALE 1/10		SHEET 6	