REVISIONS			
REV	DESCRIPTION	DATE	APPROVAL
A	FIND NUMBER DELETED. FIND NUMBER CHANGED.	96-12-19	R. VOTAW
B	(2) ITEM DELETED. (3) ITEM ADDED.	97-08-27	L. BJURMAN
C	(5) ITEM ADDED.	98-09-30	R. VOTAW

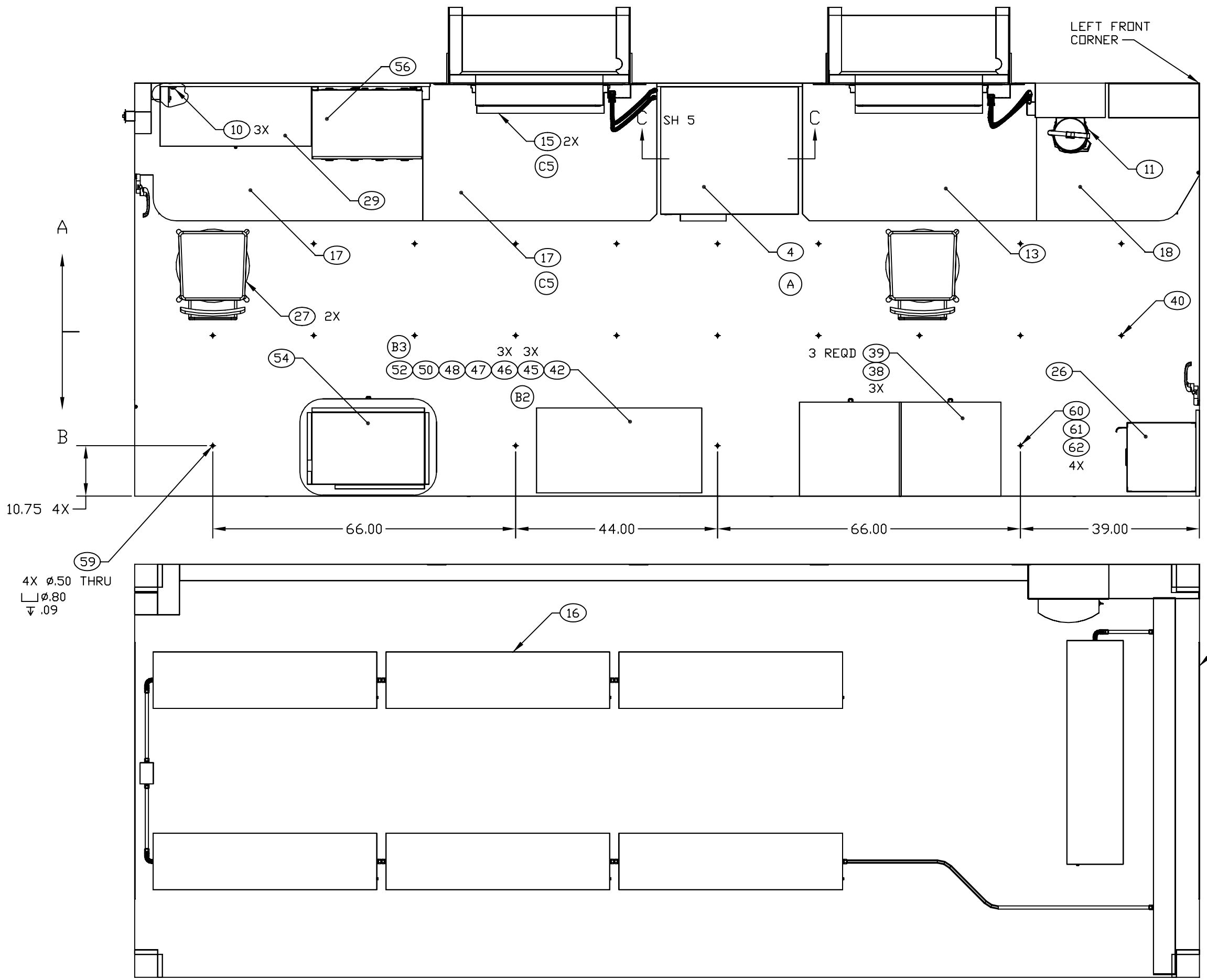

A SH 4

FLOOR PLAN

B SH 4

CEILING PLAN

ENGINEER	DATE	DRAWER	DATE	SIZE	CAGE CODE	DRAWING NUMBER	REV
P. VICENCIO	96-02-06	PRV	98-09-24	D	91145	MFKA010201	C
NEXT ASSEMBLY		CHECKER		SCALE 1/11		SHEET 3	
FINAL		MAB	96-04-22				

REVISIONS			
REV	DESCRIPTION	DATE	APPROVAL
A	FIND NUMBER DELETED. FIND NUMBER CHANGED.	96-12-19	R. VOTAW
B	(2) ITEM DELETED. (3) ITEM ADDED.	97-08-27	L. BJURMAN
C	(5) ITEM ADDED.	98-09-30	R. VOTAW
D	REVISED AND PARTIALLY REDRAWN BY P. VICENCIO. (1) ITEM DELETED.	06-02-02	R. VOTAW

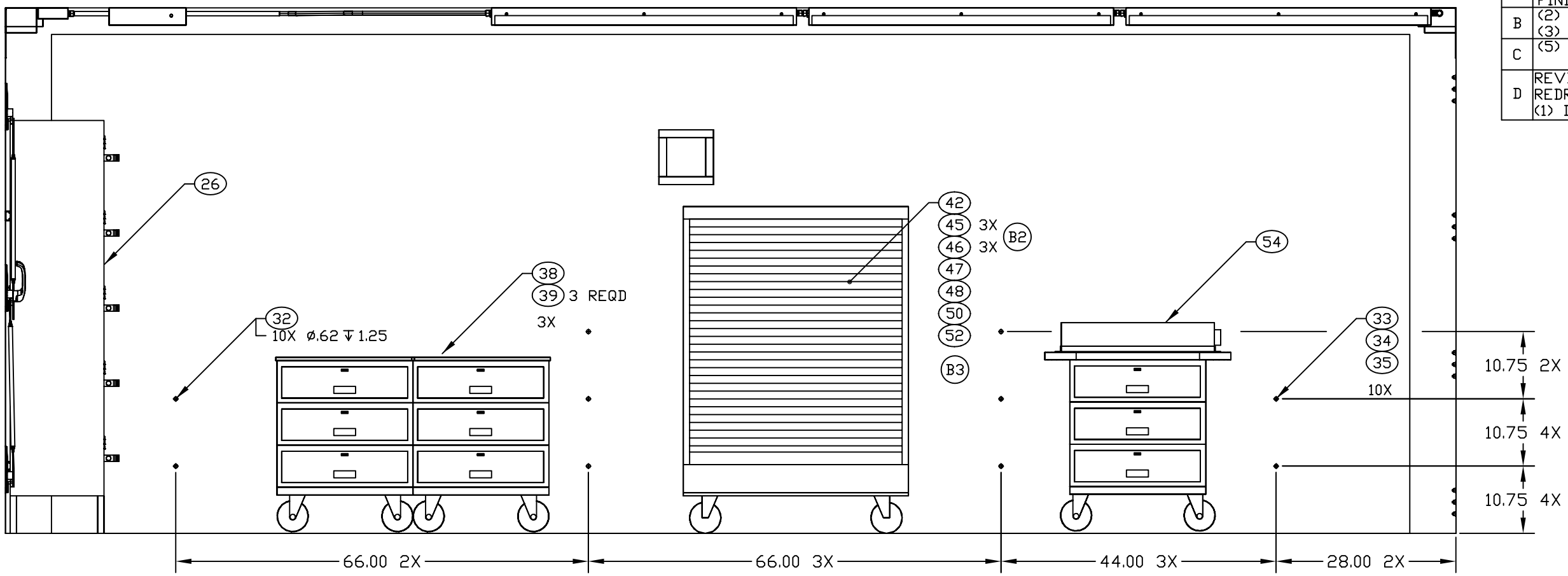

SECTION B-B SH 3
ROTATED 180°

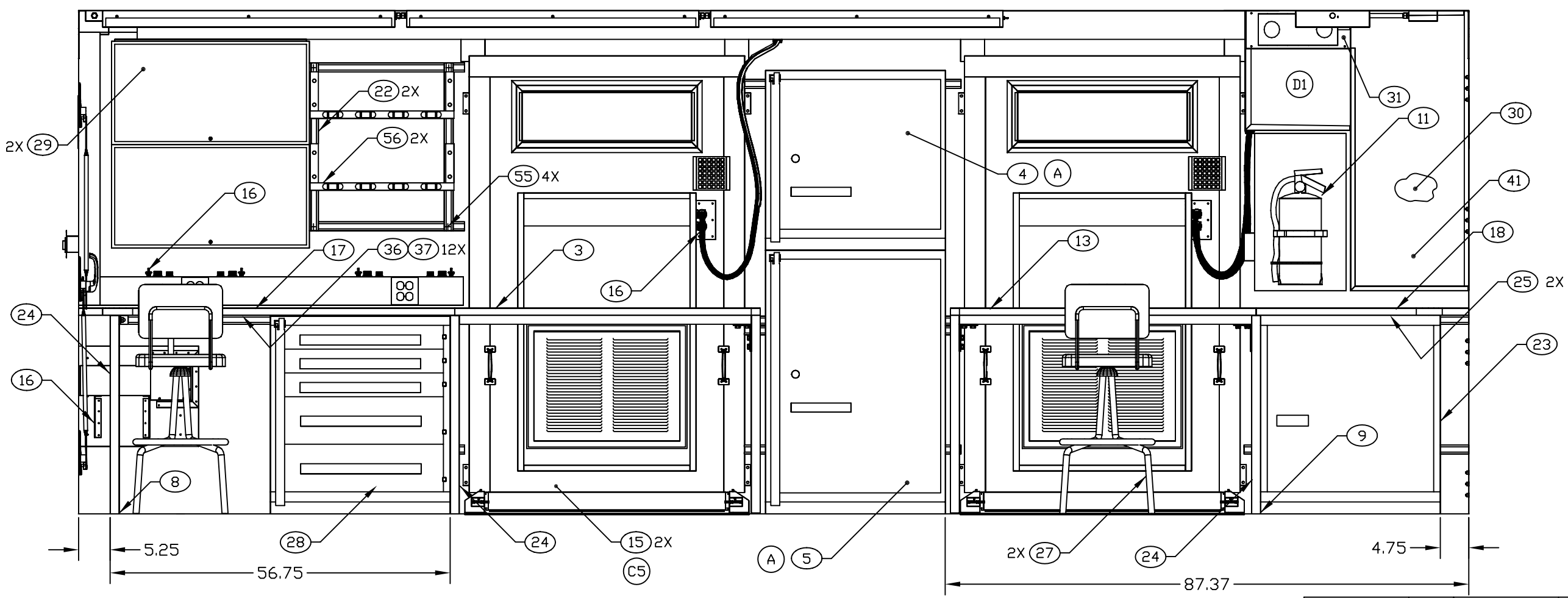

SECTION A-A SH 3

ENGINEER	DATE	DRAWER	DATE	SIZE	CAGE CODE	DRAWING NUMBER	REV
P. VICENCIO	96-01-10	PRV	98-09-24	D	91145	MFKA010201	D
NEXT ASSEMBLY		CHECKER		SCALE		SHEET	
FINAL		MAB	96-04-22	1/10		4	