REVISION HISTORY			
REV	DESCRIPTION	DATE	APPROVAL
B	REVISED AND PARTIALLY REDRAWN BY M BEUSTER. ELECTRICAL CHANGED.	2006-09-14	R A VOTAW

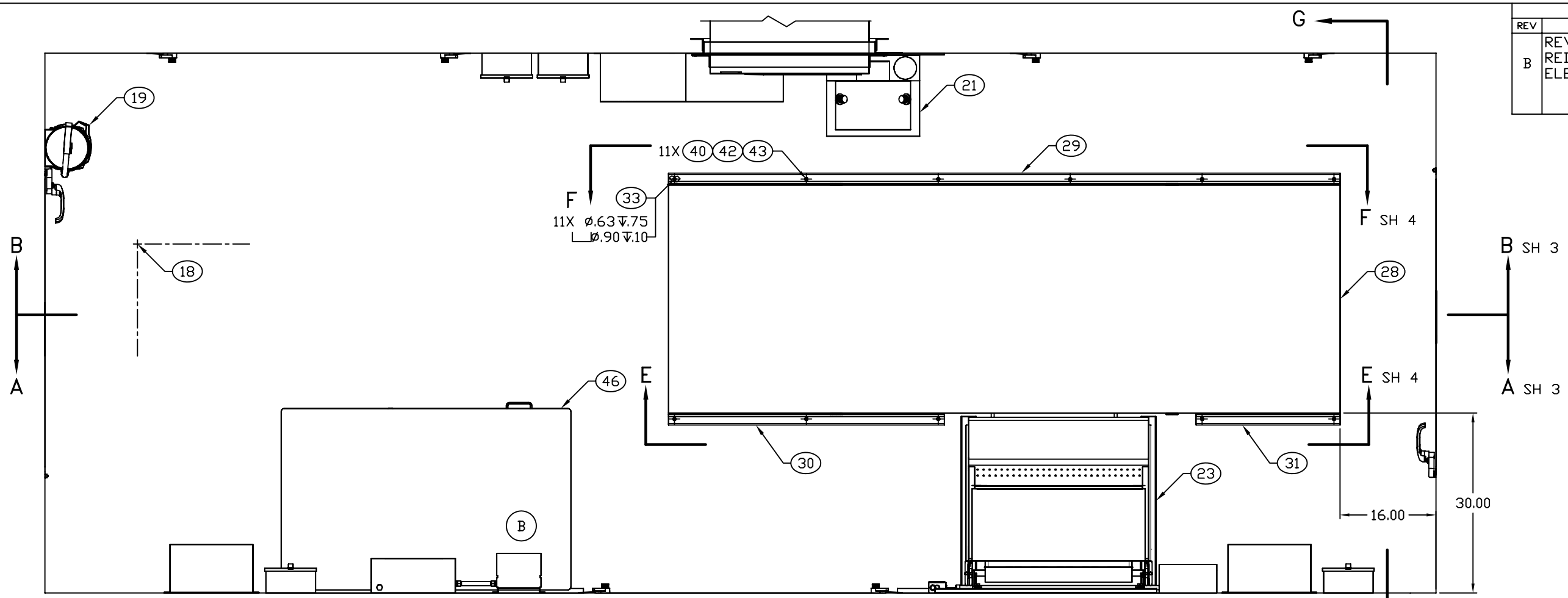

FLOOR PLAN

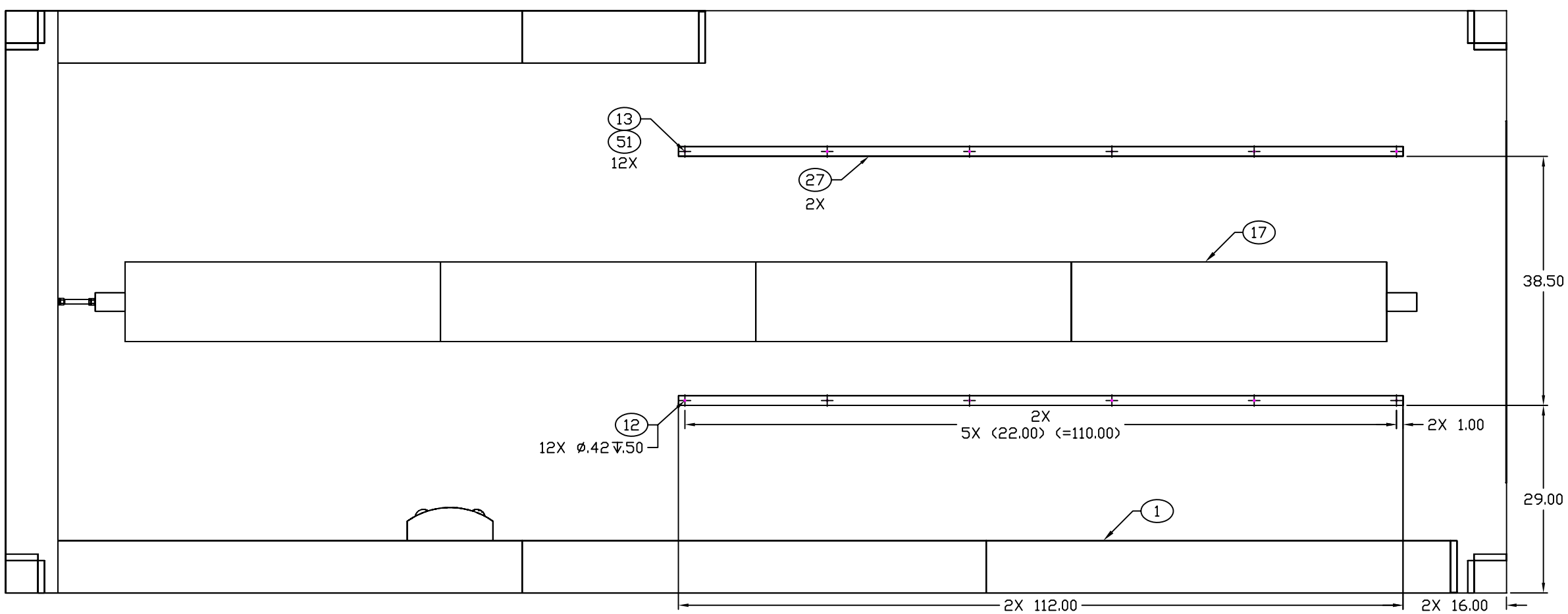

CEILING PLAN

ENGINEER	DATE	DRAWER	DATE	SIZE	CAGE CODE	DRAWING NUMBER	REV
M BEUSTER	2005-09-16	MAB	2005-09-16	D	91145	MFJU350101	B
NEXT ASSEMBLY		CHECKER		SCALE		SHEET	
MFNS080101		TN	2005-09-16	1/10		2	

REVISION HISTORY			
REV	DESCRIPTION	DATE	APPROVAL
B	REVISED AND PARTIALLY REDRAWN BY M BEUSTER. ELECTRICAL CHANGED.	2006-09-14	R A VOTAW

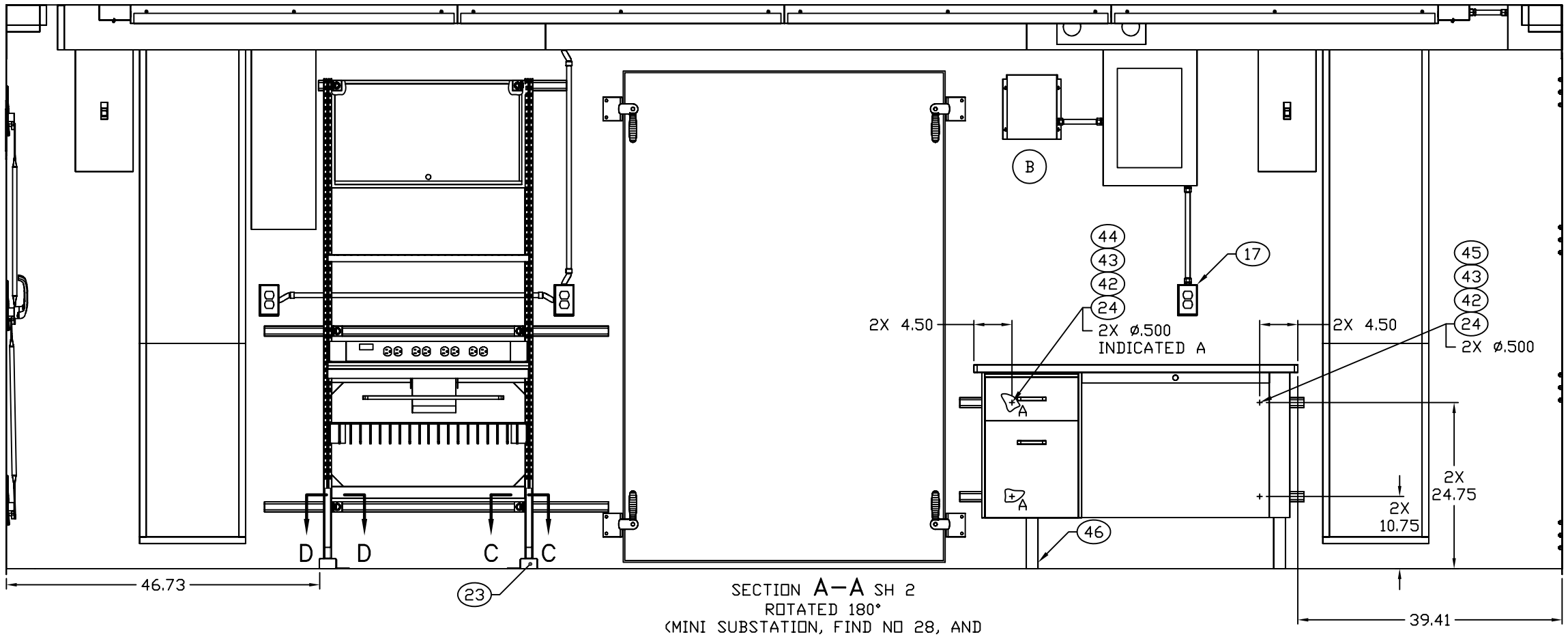

SECTION A–A SH 2
ROTATED 180°
(MINI SUBSTATION, FIND NO 28, AND
FLOOR ANGLES NOT SHOWN)

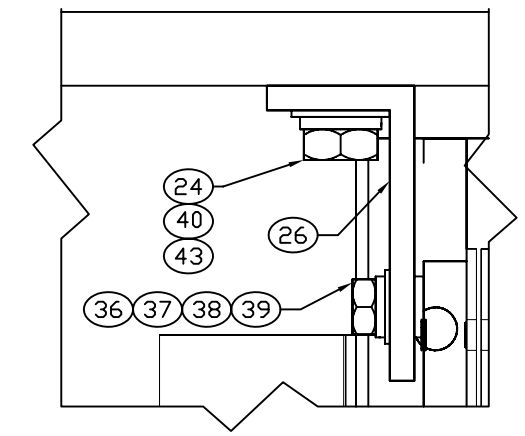

3X SECTION C–C
SCALE 1/1

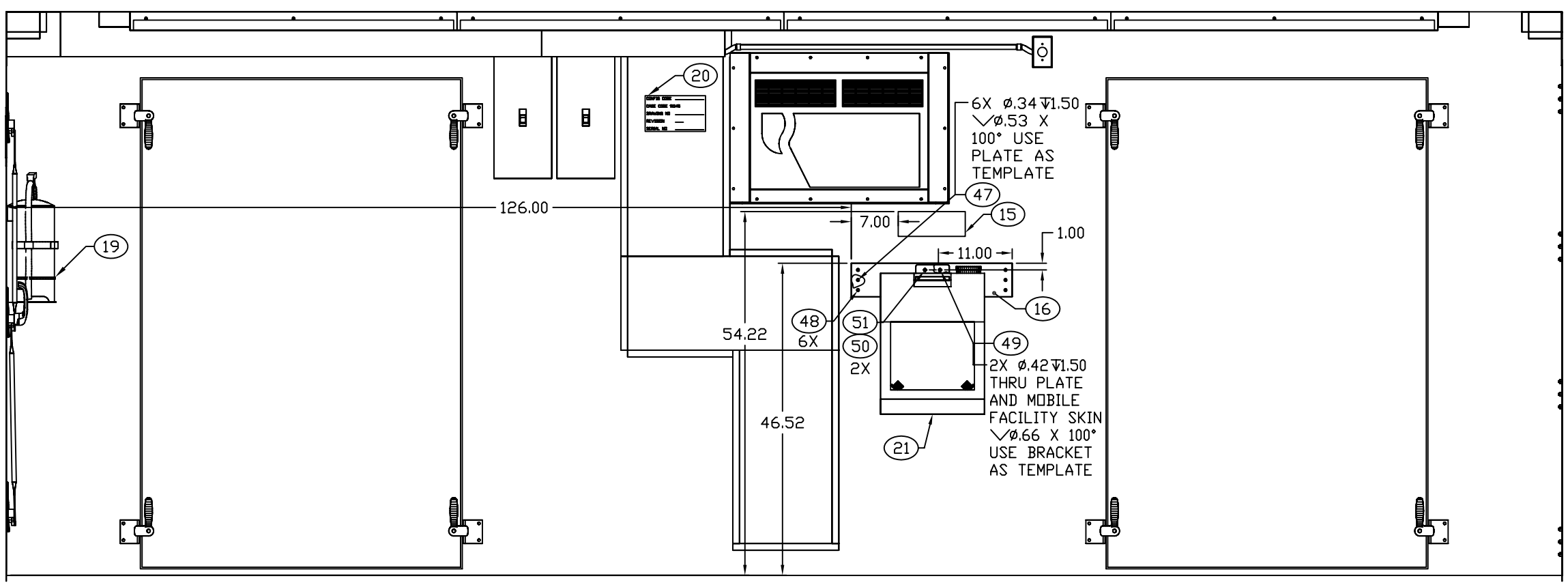

SECTION B–B SH 2
(MINI SUBSTATION, FIND NO 28, AND
FLOOR ANGLE NOT SHOWN)

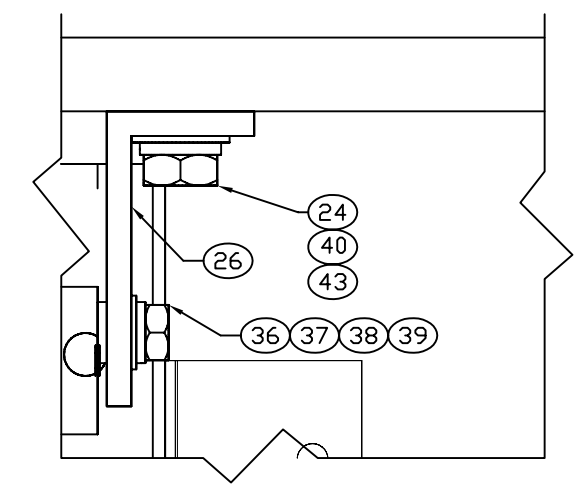

3X SECTION D–D
SCALE 1/1

ENGINEER	DATE	DRAWER	DATE	SIZE	CAGE CODE	DRAWING NUMBER	REV
M BEUSTER	2005-09-16	MAB	2005-09-16	D	91145	MFJU350101	B
NEXT ASSEMBLY MFNS080101		CHECKER TN	2005-09-16	SCALE 1/10		SHEET 3	