REVISION HISTORY			
REV	DESCRIPTION	DATE	APPROVAL

FLOOR PLAN

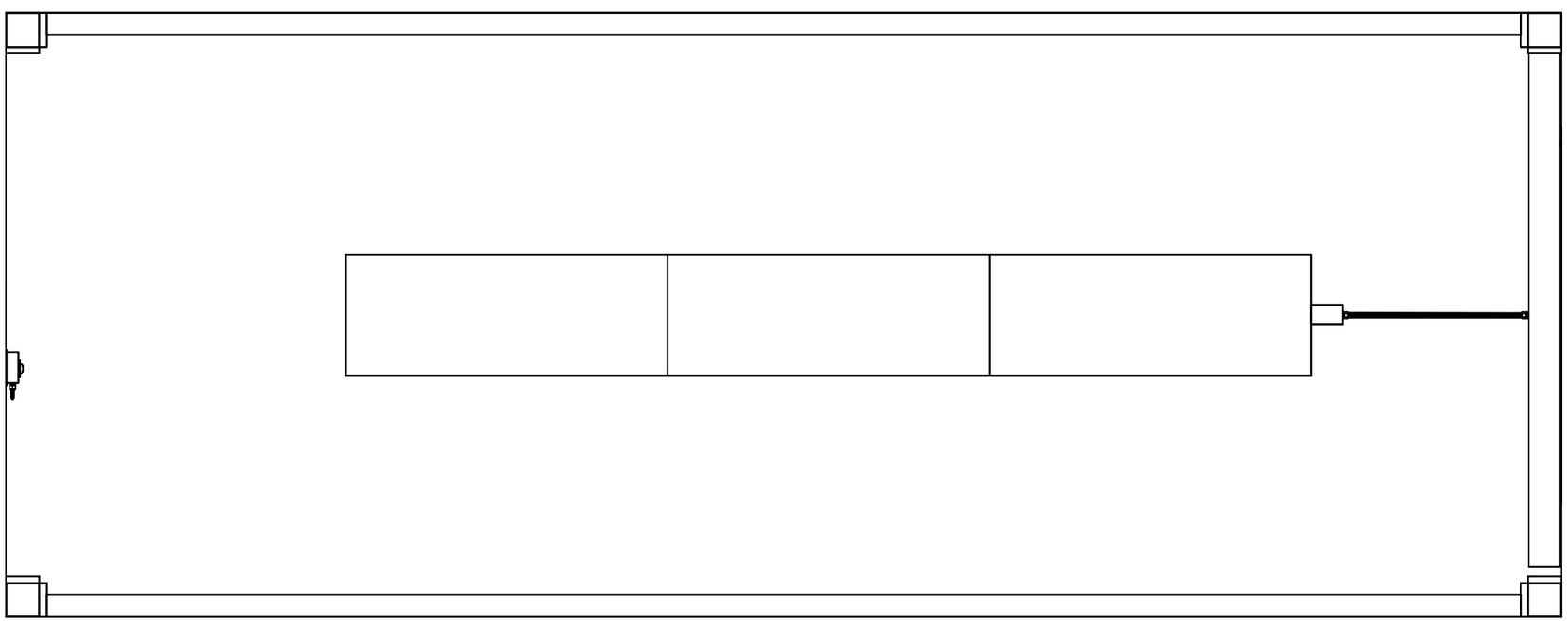

CEILING PLAN
AFTER MODIFICATION

ENGINEER	DATE	DRAWER	DATE	SIZE	CAGE CODE	DRAWING NUMBER	REV
	98-03-20	TN	98-03-20	D	91145	MFHM030260	–
NEXT ASSEMBLY		CHECKER		SCALE 1/11		SHEET 4	
FINAL							

REVISION HISTORY			
REV	DESCRIPTION	DATE	APPROVAL

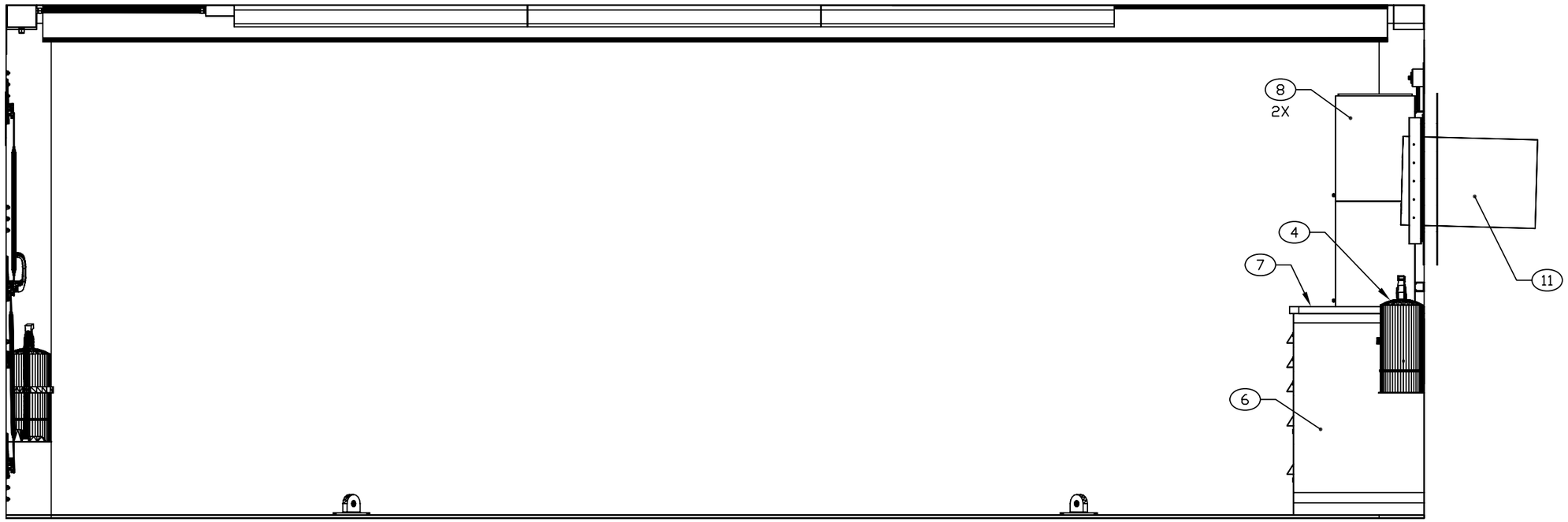

RIGHT WALL

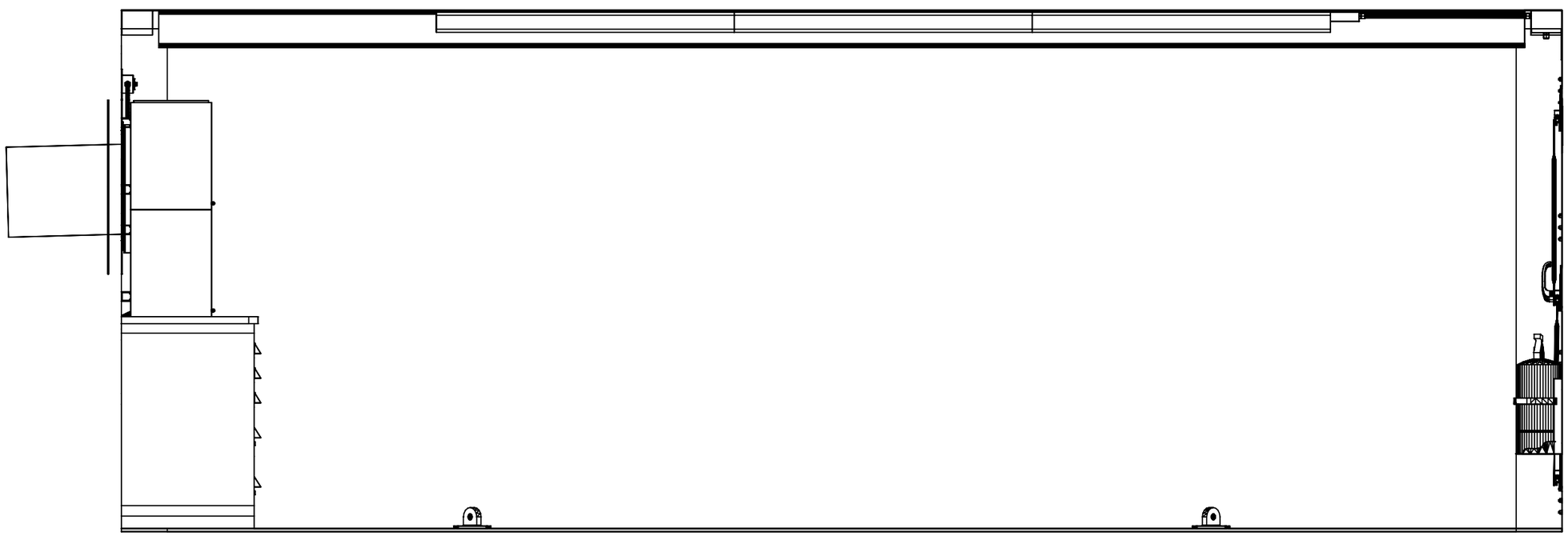

LEFT WALL

AFTER MODIFICATION

ENGINEER	DATE	DRAWER	DATE	SIZE	CAGE CODE	DRAWING NUMBER	REV
	98-03-20	TN	98-03-20	D	91145	MFHM030260	–
NEXT ASSEMBLY		CHECKER		SCALE 1/10		SHEET 5	
FINAL							

REVISION HISTORY			
REV	DESCRIPTION	DATE	APPROVAL

NOTES:

6.1 MEASURE FROM TOP OF PREEXISTING FLOOR COVERVING.

6.2 RECEPTACLE BOX ASSEMBLY SHOWN IN DEPLOYED POSITION. SEE MFHM010261 TO VIEW IN STOWED POSITION.

6.3 USE RECEPTACLE MOUNTING PLATE, PART NO MFHM010291-101 AS TEMPLATE TO LOCATE HOLES.

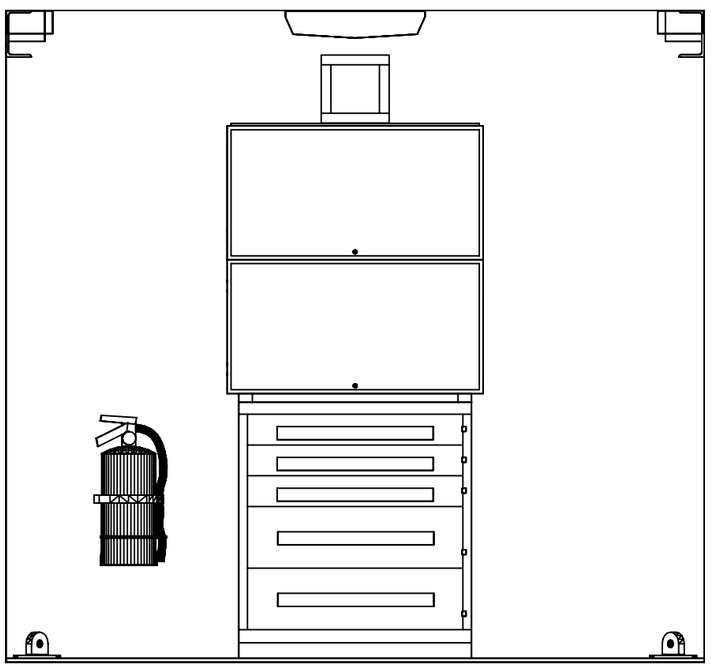

REAR WALL
BEFORE MODIFICATION

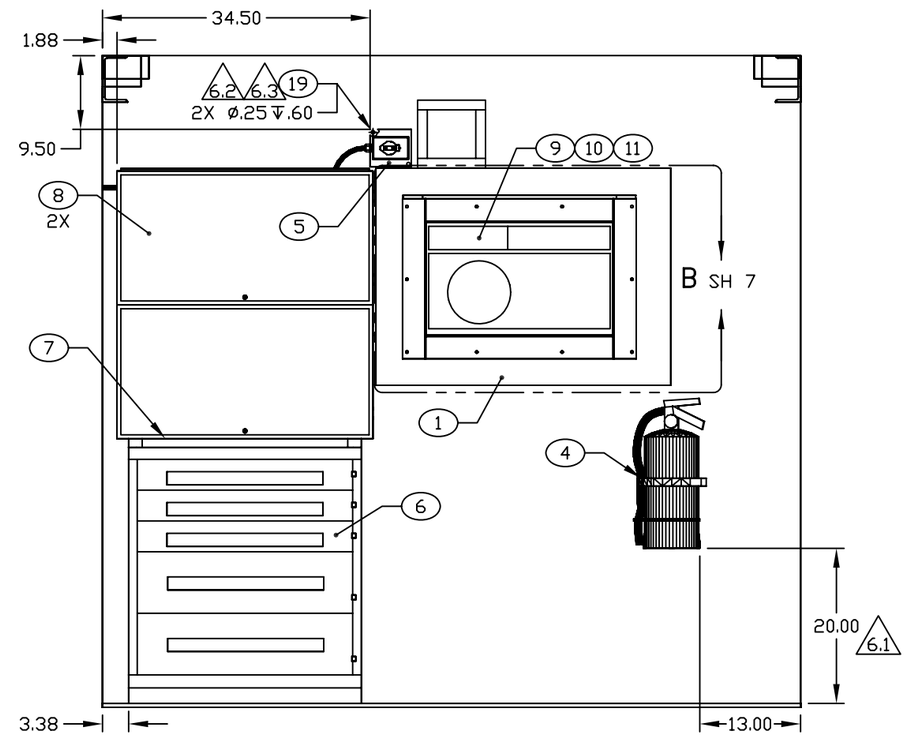

REAR WALL
AFTER MODIFICATION

ENGINEER	DATE	DRAWER	DATE	SIZE	CAGE CODE	DRAWING NUMBER	REV
	98-03-20	TN	98-03-20	D	91145	MFHM030260	–
NEXT ASSEMBLY FINAL		CHECKER		SCALE 1/10		SHEET 6	