REVISION HISTORY			
REV	DESCRIPTION	DATE	APPROVAL
E	REVISED AND PARTIALLY REDRAWN BY M BEUSTER.	03-06-30	R A VOTAW

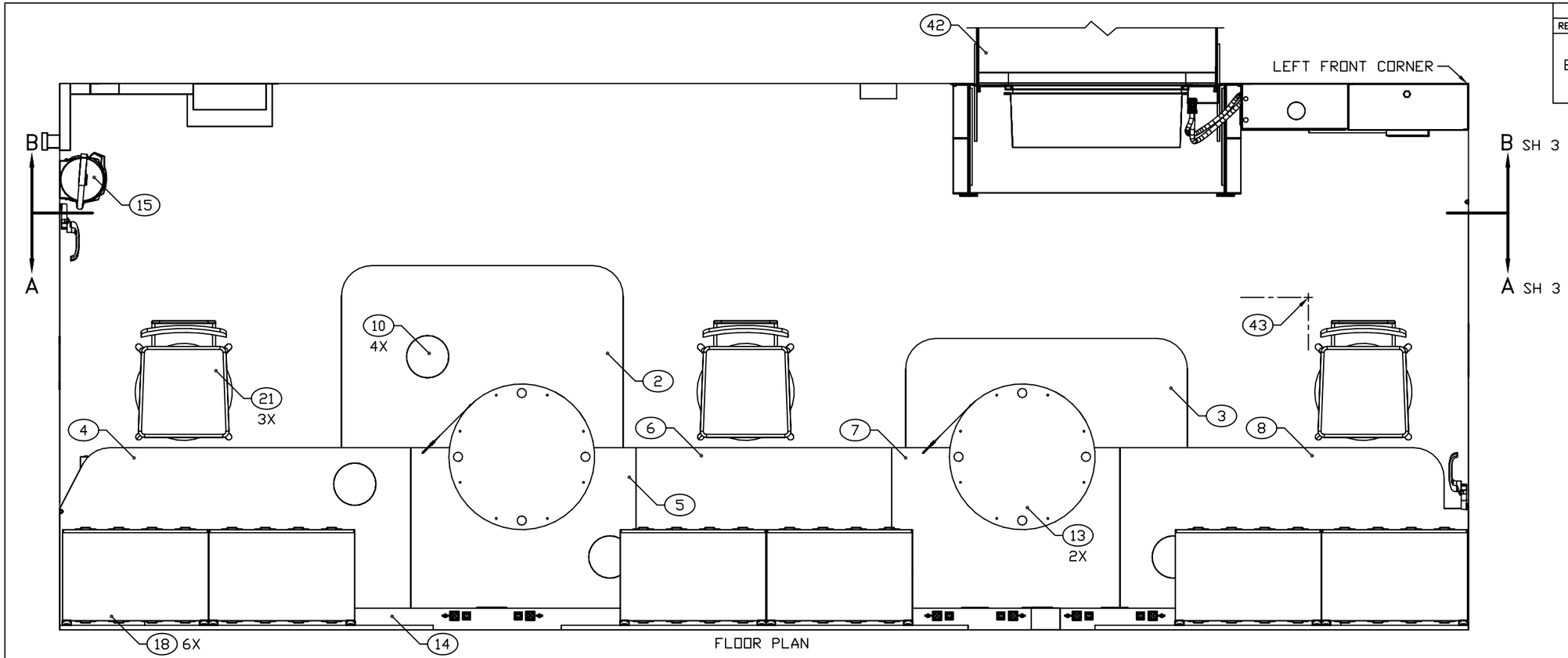

FLOOR PLAN

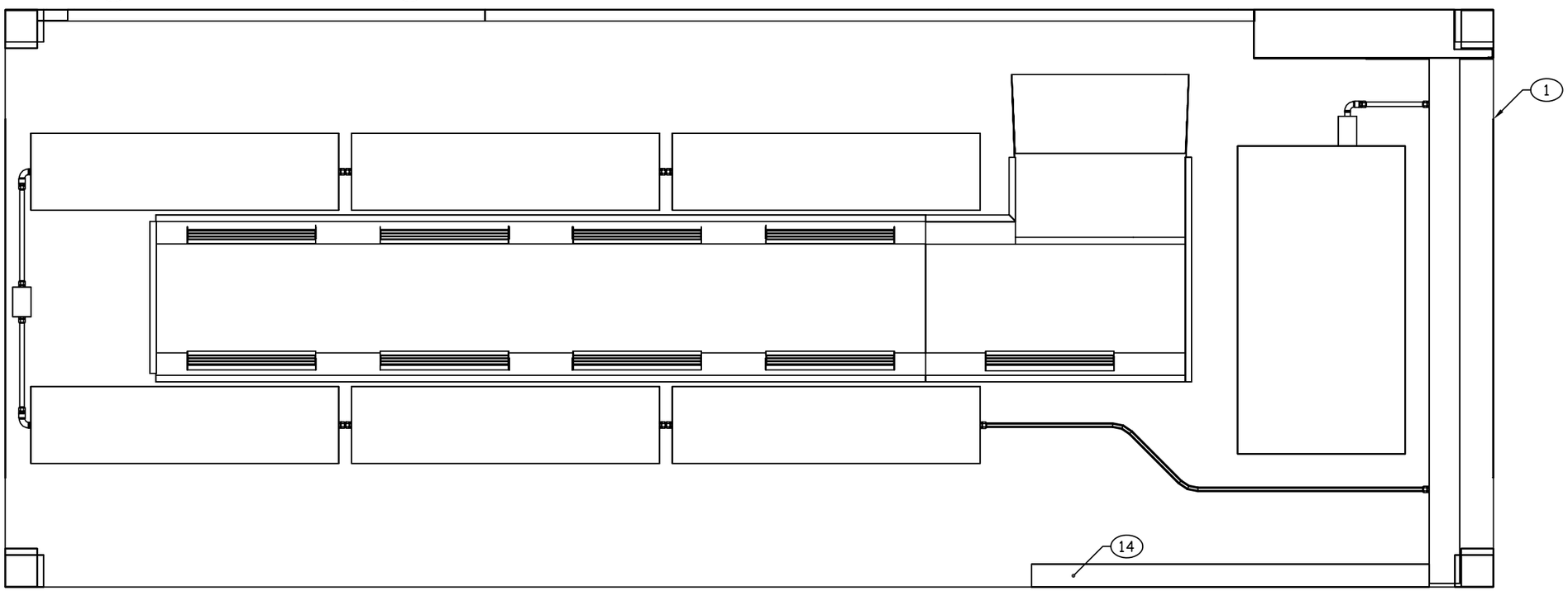

CEILING PLAN

ENGINEER	DATE	DRAWER	DATE	SIZE	CAGE CODE	DRAWING NUMBER	REV
M BEUSTER	84-12-04	TRAN	86-09-12	D	91145	MFHD030101	E
NEXT ASSEMBLY		CHECKER		SCALE		SHEET	
FINAL		C KIMBEL	88-02-12	1/10		2	

REVISION HISTORY			
REV	DESCRIPTION	DATE	APPROVAL
E	REVISED AND PARTIALLY REDRAWN BY M BEUSTER.	03-06-30	R A VOTAW

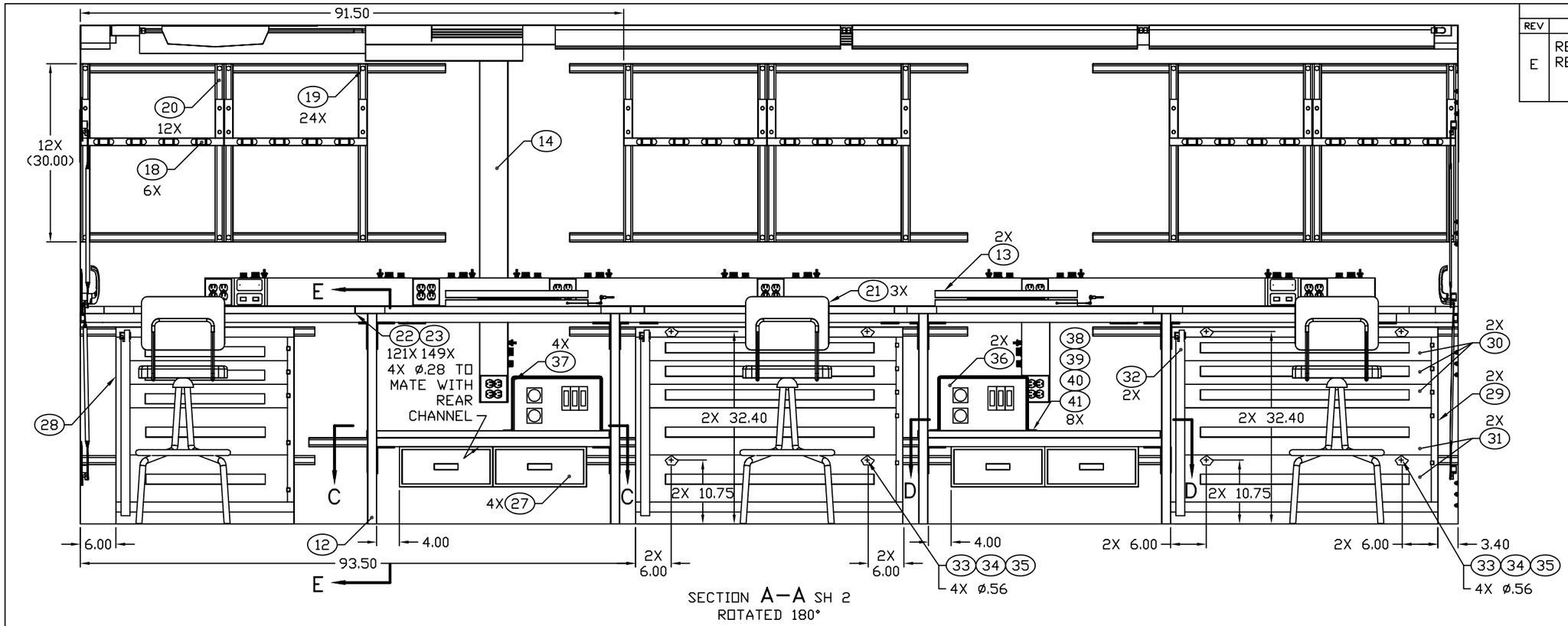

SECTION A–A SH 2
ROTATED 180°

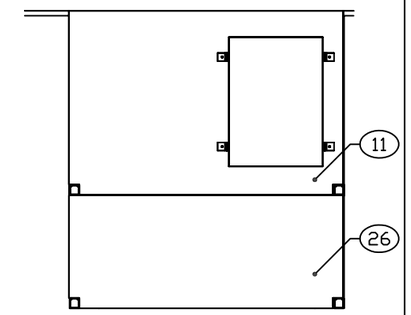

SECTION C–C

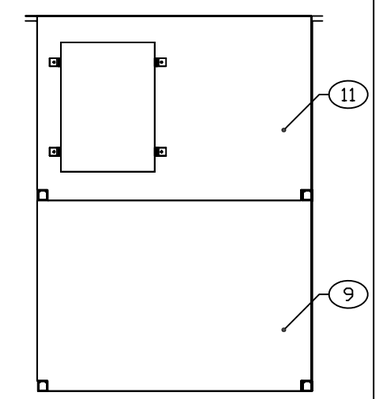

SECTION D–D

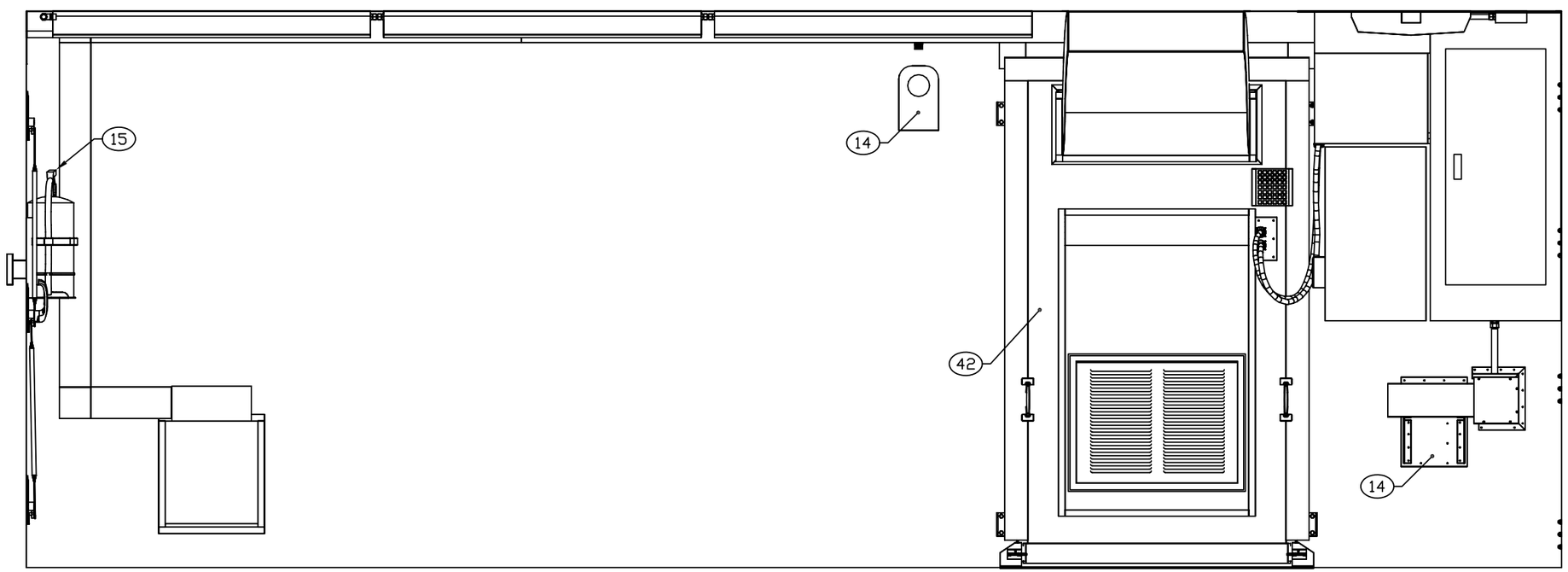

SECTION B–B SH 2

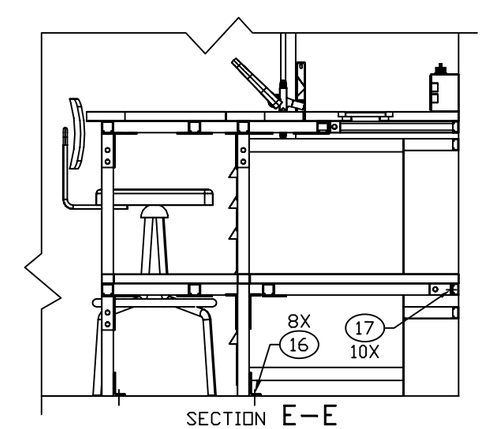

SECTION E–E

ENGINEER	DATE	DRAWER	DATE	SIZE	CAGE CODE	DRAWING NUMBER	REV
M BEUSTER	84-12-04	TRAN	86-09-12	D	91145	MFHD030101	E
NEXT ASSEMBLY		CHECKER		SCALE		SHEET	
FINAL		C KIMBEL	88-02-12	1/10		3	