REVISION HISTORY			
REV	DESCRIPTION	DATE	APPROVAL
A	REVISED AND REDRAWN WITH CHANGES BY T H NGUYEN.	02-10-17	R VOTAW

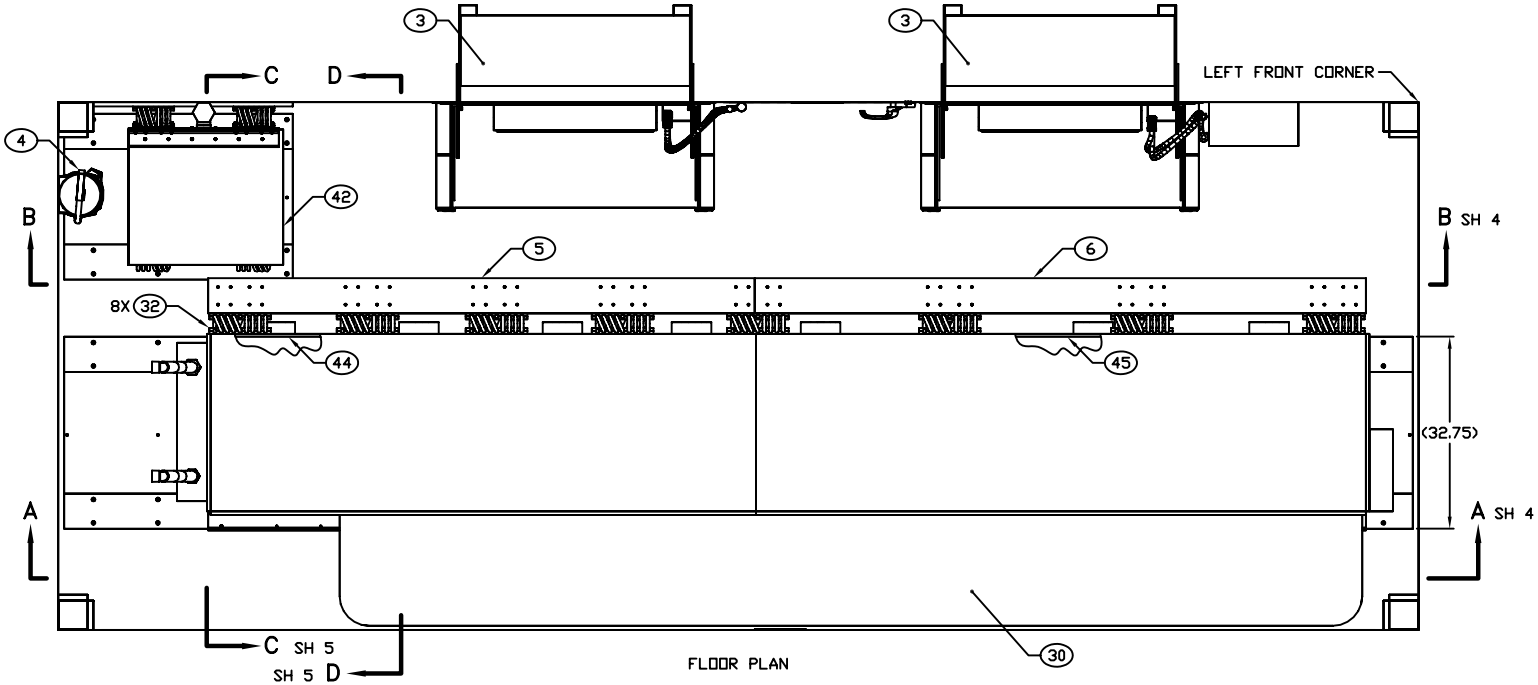

FLOOR PLAN

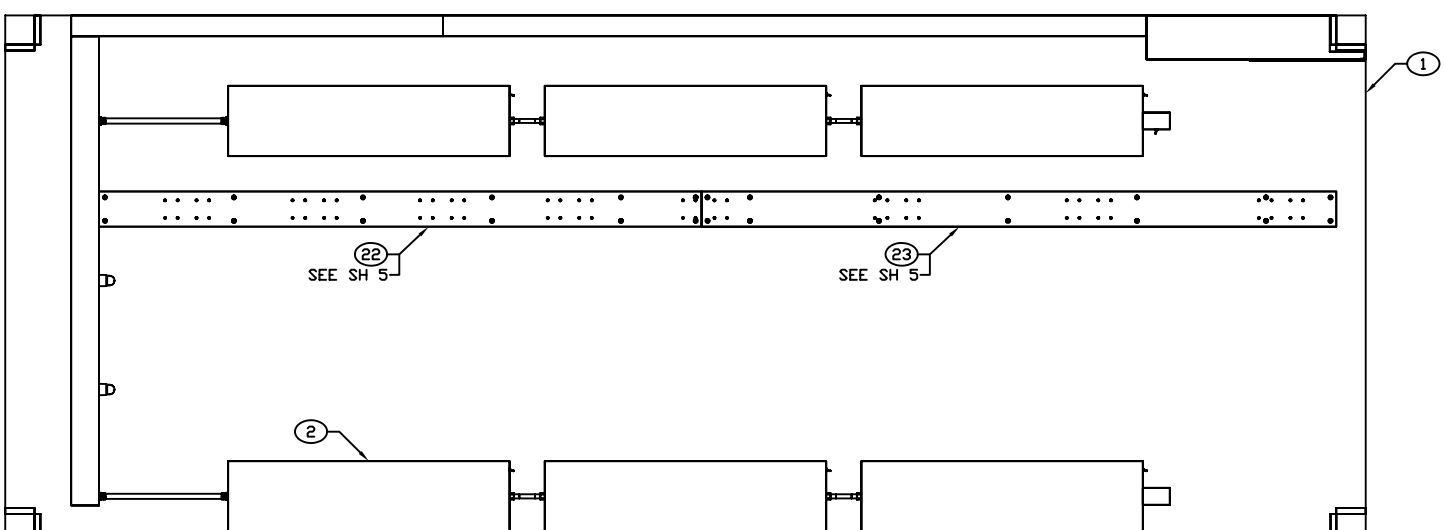

FLOOR PLAN

ENGINEER	DATE	DRAWER	DATE	SIZE	CAGE CODE	DRAWING NUMBER	REV
PWC NORFOLK	-	D BUNCH	84-08-15	D	0W681	MFFT020201	A
NEXT ASSEMBLY		CHECKER		SCALE		SHEET	
FINAL		C W HAGA	84-09-14	1/11		3	

REVISION HISTORY			
REV	DESCRIPTION	DATE	APPROVAL
A	REVISED AND REDRAWN WITH CHANGES BY T H NGUYEN.	02-10-17	R VOTAW

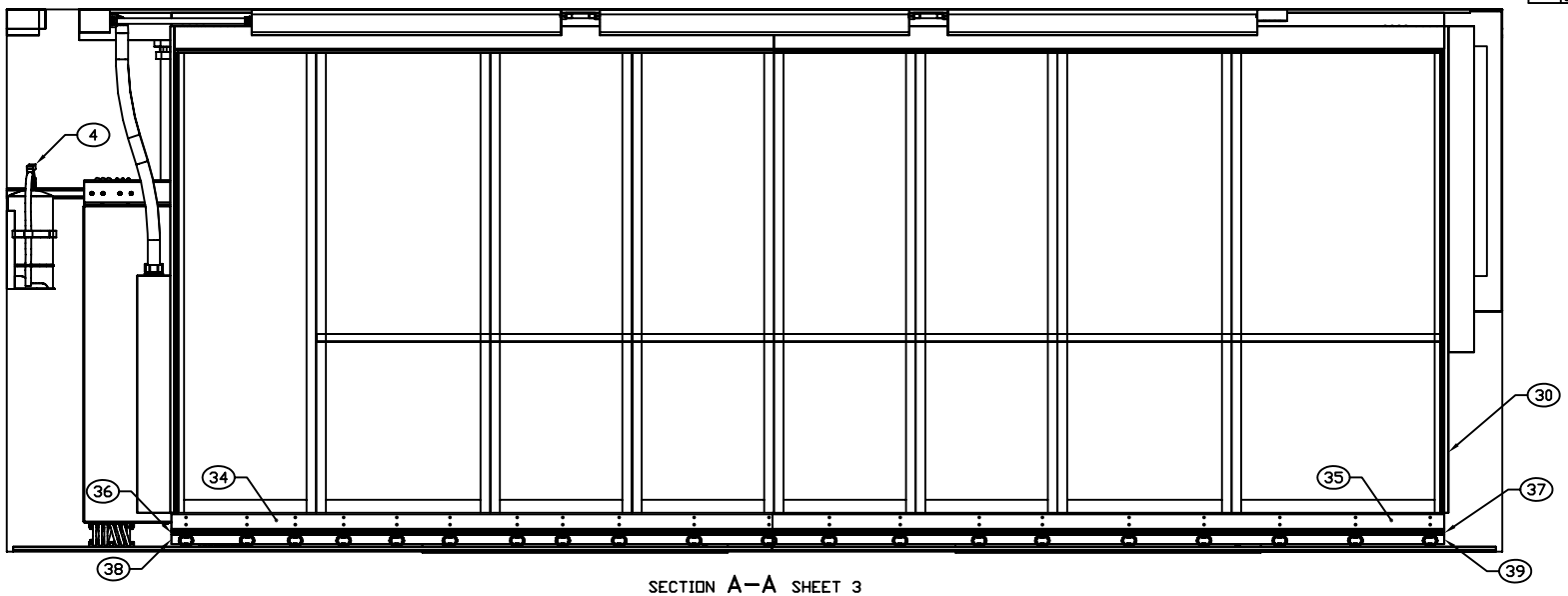

SECTION A–A SHEET 3

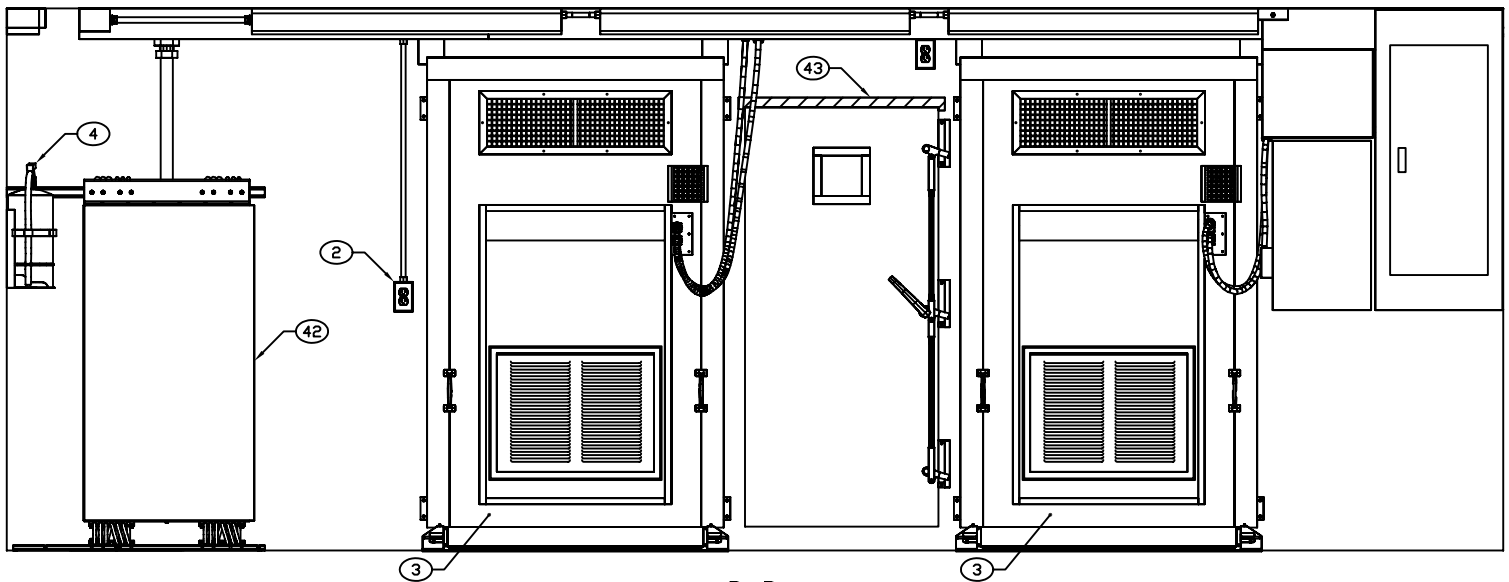

SECTION B–B SHEET 3

ENGINEER	DATE	DRAWER	DATE	SIZE	CAGE CODE	DRAWING NUMBER	REV
PWC NORFOLK	-	D BUNCH	84-08-15	D	0W681	MFFT020201	A
NEXT ASSEMBLY		CHECKER		SCALE		SHEET	
FINAL		C W HAGA	84-09-14	1/10		4	