REVISION HISTORY			
REV	DESCRIPTION	DATE	APPROVAL
A	REDRAWN WITH CHANGES.	02-05-15	R VOTAW
B	(1) ITEM ADDED.	02-09-12	R VOTAW

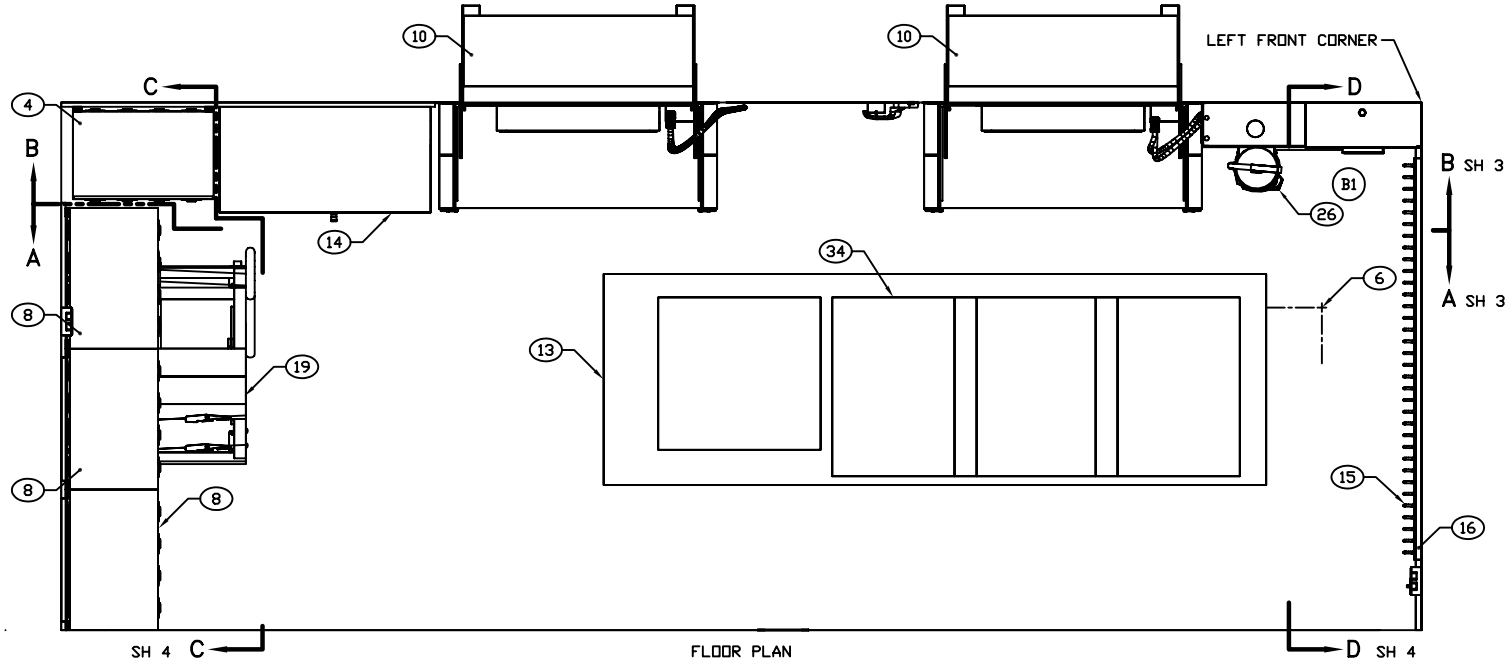

FLOOR PLAN

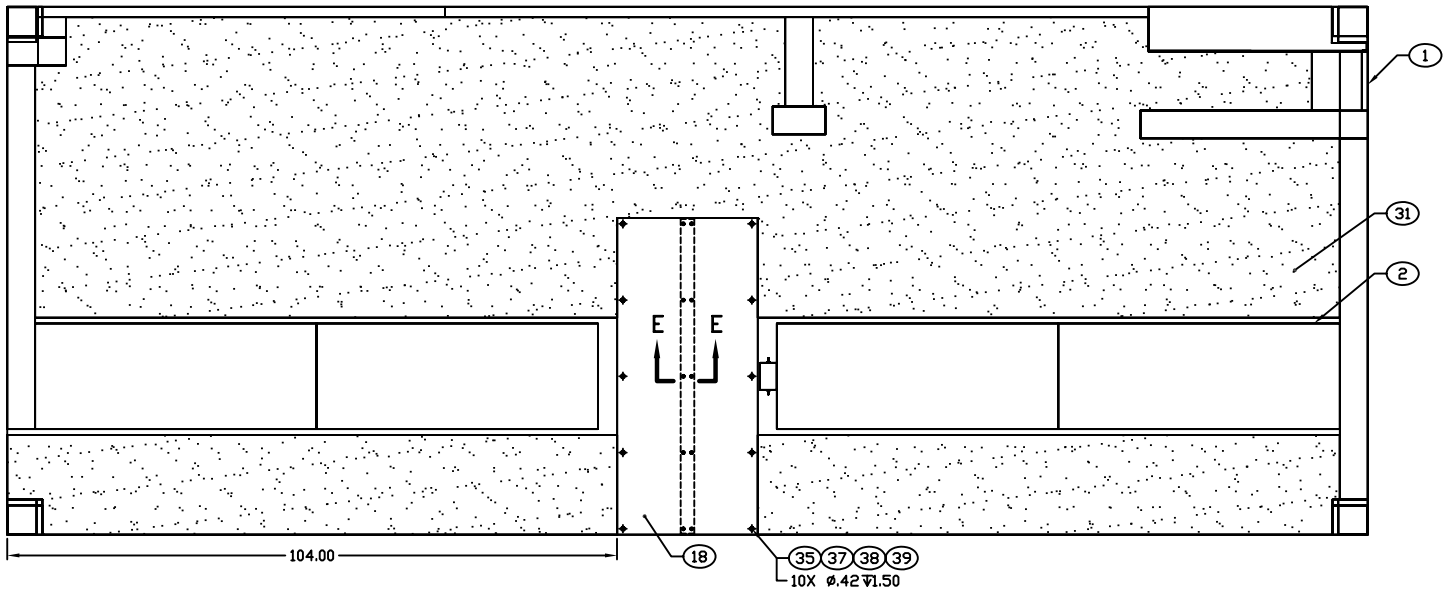

CEILING PLAN

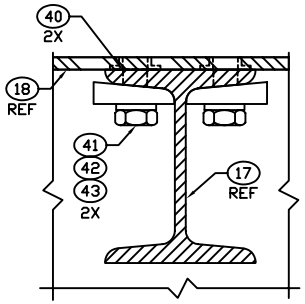

SECTION E–E
SCALE 1/1
5X

ENGINEER	DATE	DRAWER	DATE	SIZE	CAGE CODE	DRAWING NUMBER	REV
F S DELEON	83-12-01	TN	02-05-13	D	91145	MFFL060401	B
NEXT ASSEMBLY		CHECKER		SCALE		SHEET	
FINAL		SIDDENS	84-01-21	1/11		2	

REVISION HISTORY			
REV	DESCRIPTION	DATE	APPROVAL
A	REDRAWN WITH CHANGES.	02-05-15	R VOTAW
B	(1) ITEM ADDED.	02-09-12	R VOTAW

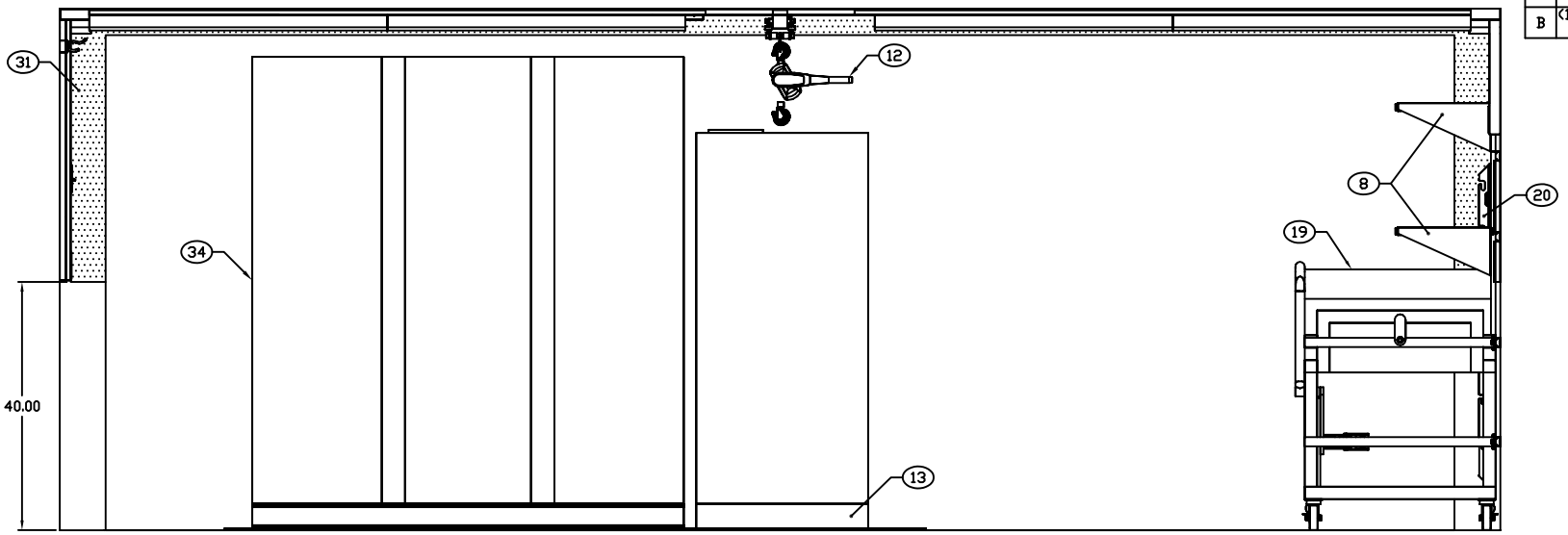

SECTION A–A SHEET 2
ROTATED 180°

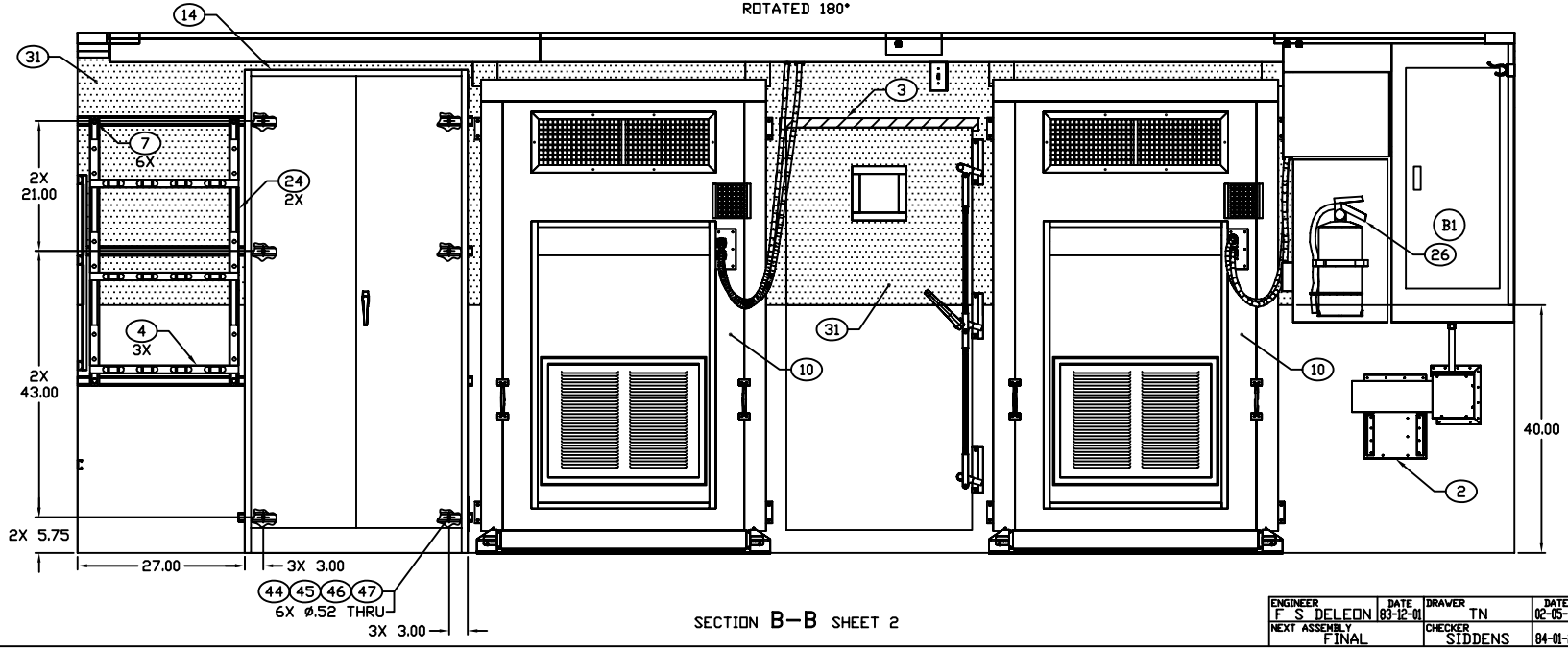

SECTION B–B SHEET 2

ENGINEER	DATE	DRAWER	DATE	SIZE	CAGE CODE	DRAWING NUMBER	REV
F S DELEON	83-12-01	TN	02-05-13	D	91145	MFFL060401	B
NEXT ASSEMBLY		CHECKER		SCALE 1/10		SHEET 3	
FINAL		SIDDENS	84-01-21				