REVISION HISTORY			
REV	DESCRIPTION	DATE	APPROVAL

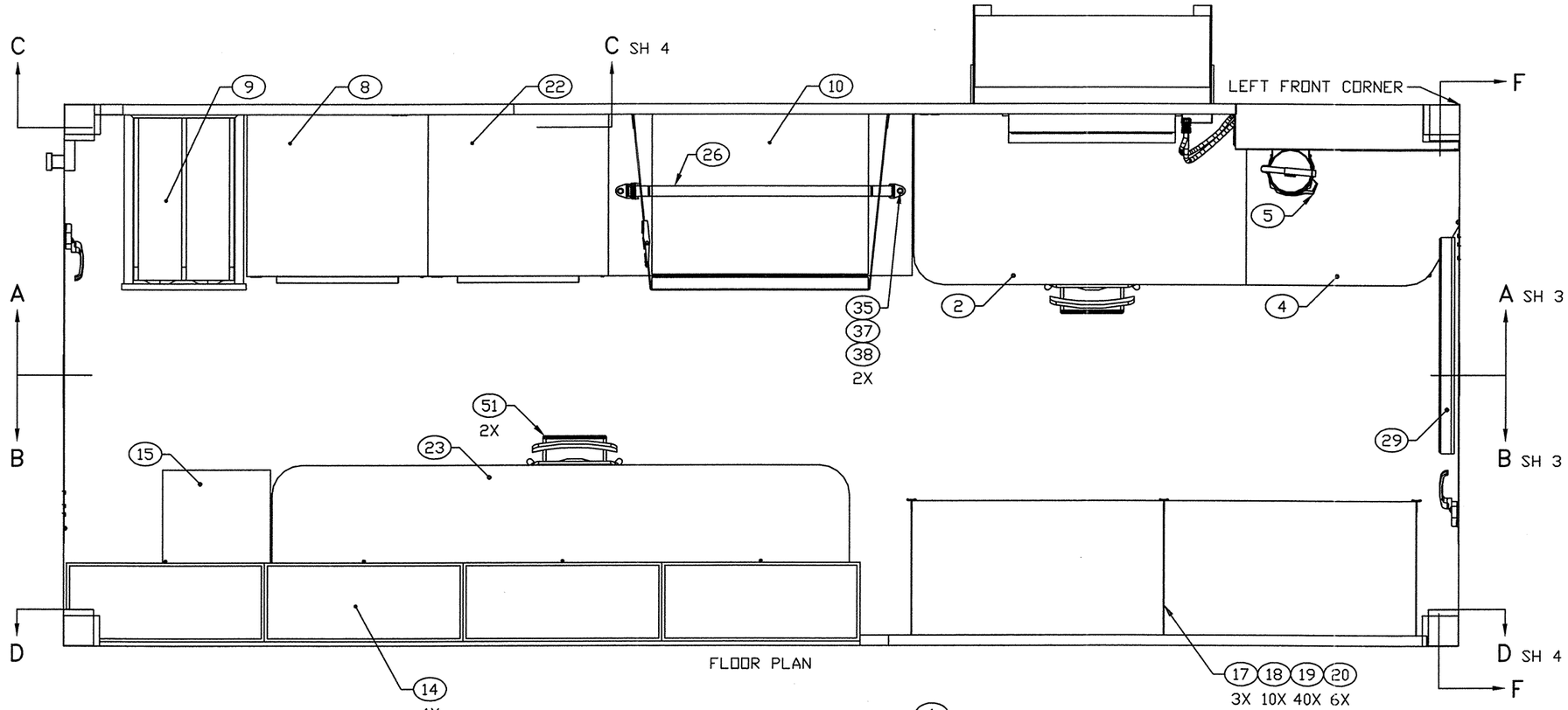

FLOOR PLAN

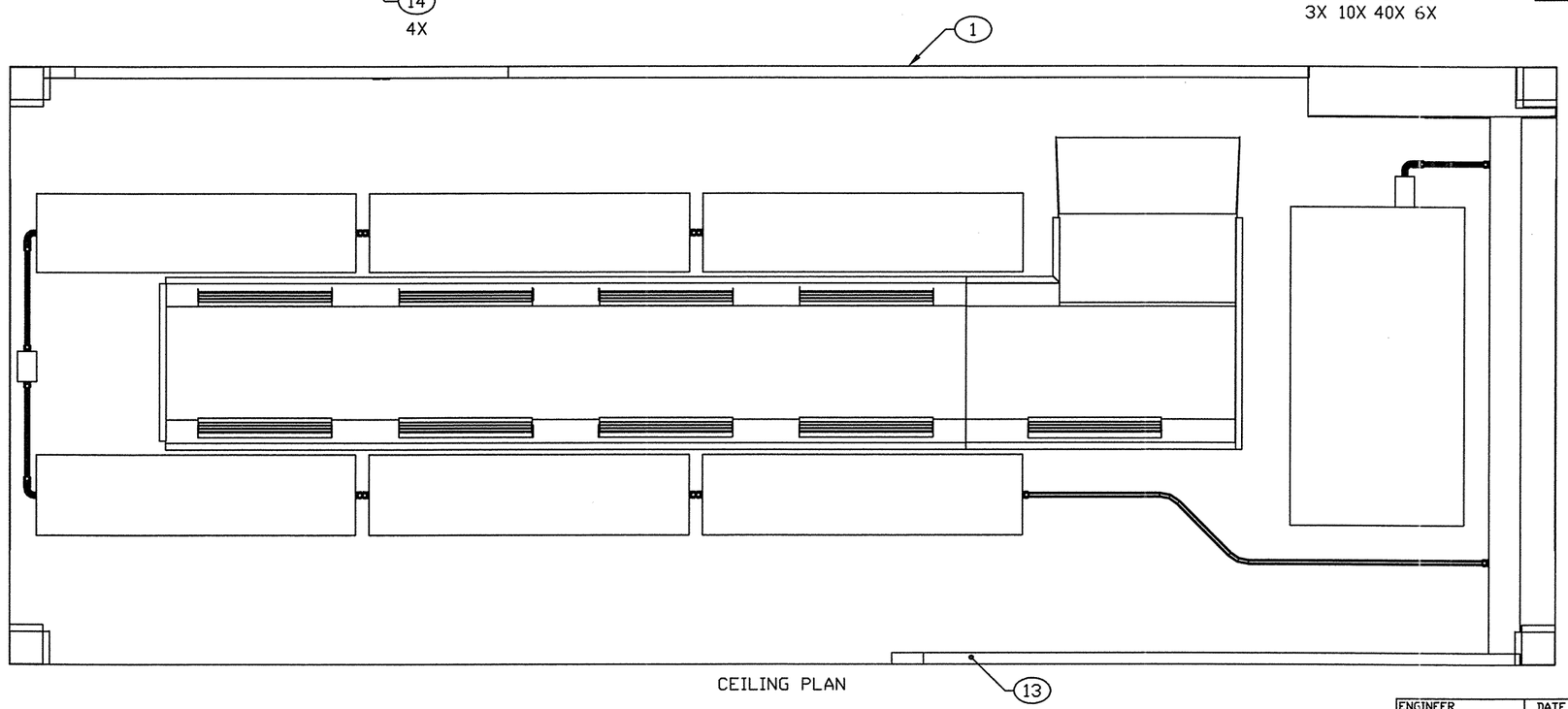

CEILING PLAN

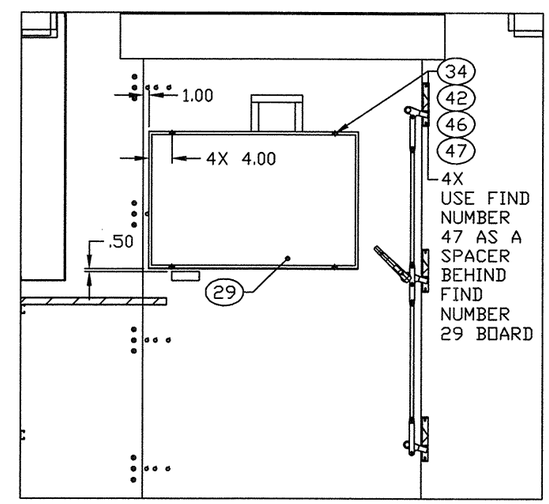

SECTION F–F
ROTATED 90° CCW
SCALE 1/13

ENGINEER	DATE	DRAWER	DATE	SIZE	CAGE CODE	DRAWING NUMBER	REV
E. E. MOON	00-07-13	MAB	00-07-13	D	91145	MFFH040101	–
NEXT ASSEMBLY FINAL		CHECKER TN	00-07-24	SCALE 1/11		SHEET 2	

REVISION HISTORY			
REV	DESCRIPTION	DATE	APPROVAL

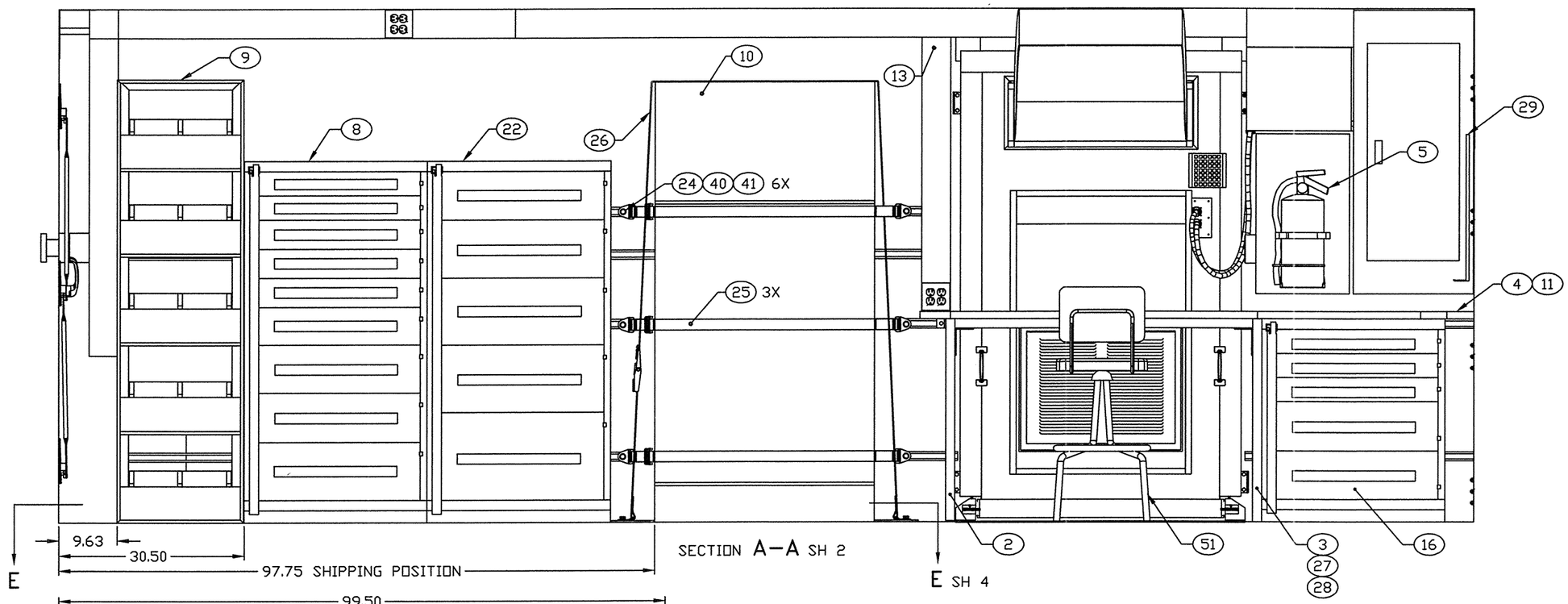

SECTION A–A SH 2

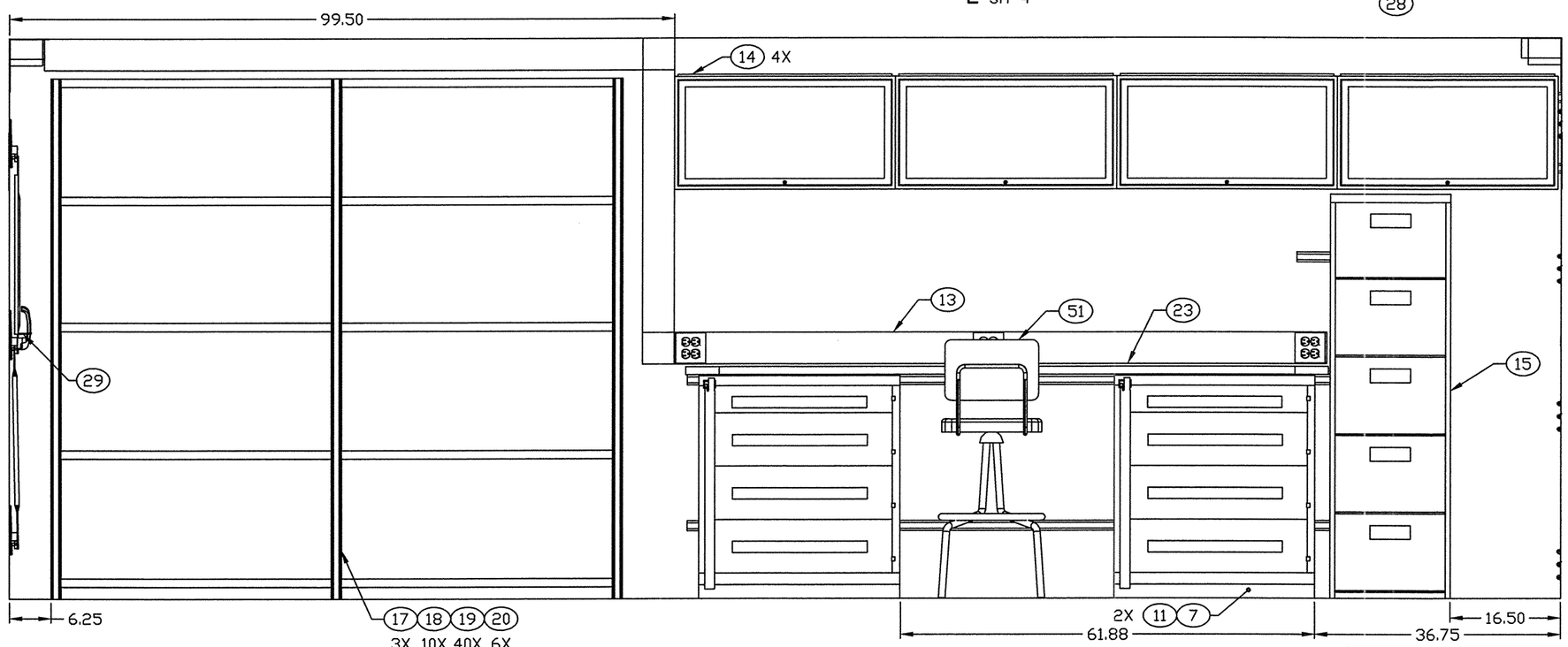

SECTION B–B SH 2
ROTATED 180°

ENGINEER	DATE	DRAWER	DATE	SIZE	CAGE CODE	DRAWING NUMBER	REV
E E MOON	00-07-13	MAB	00-07-13	D	91145	MFFH040101	–
NEXT ASSEMBLY FINAL		CHECKER TN	00-07-24	SCALE 1/10		SHEET 3	