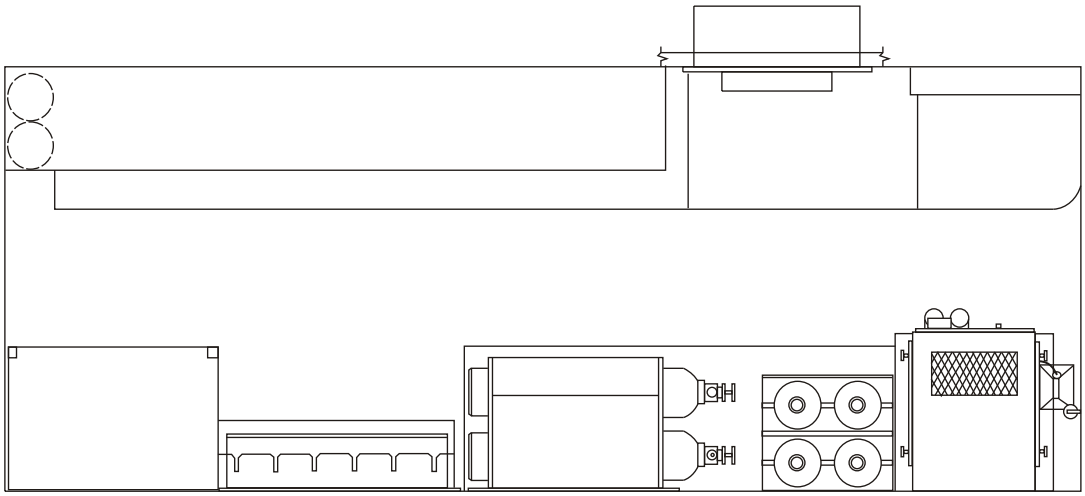

FLOOR PLAN

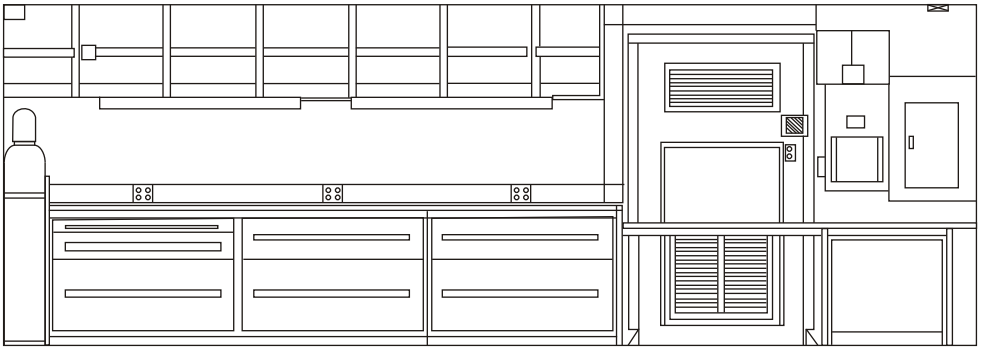

LEFT SIDE

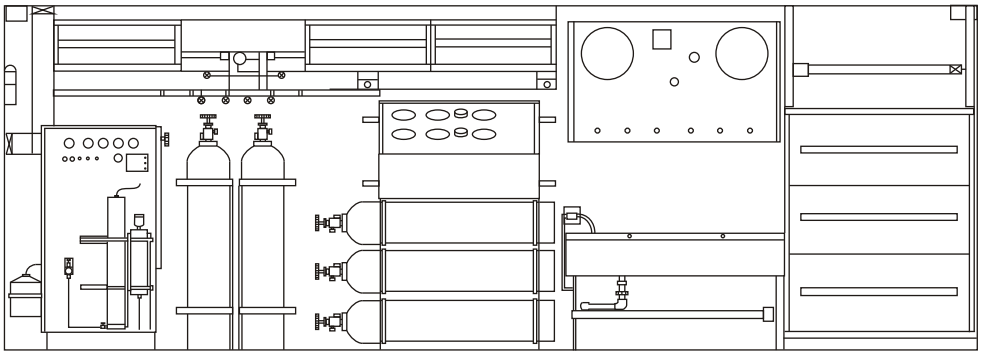

RIGHT SIDE