REVISIONS			
REV	DESCRIPTION	DATE	APPROVAL
A	REDRAWN WITH CHANGES.		

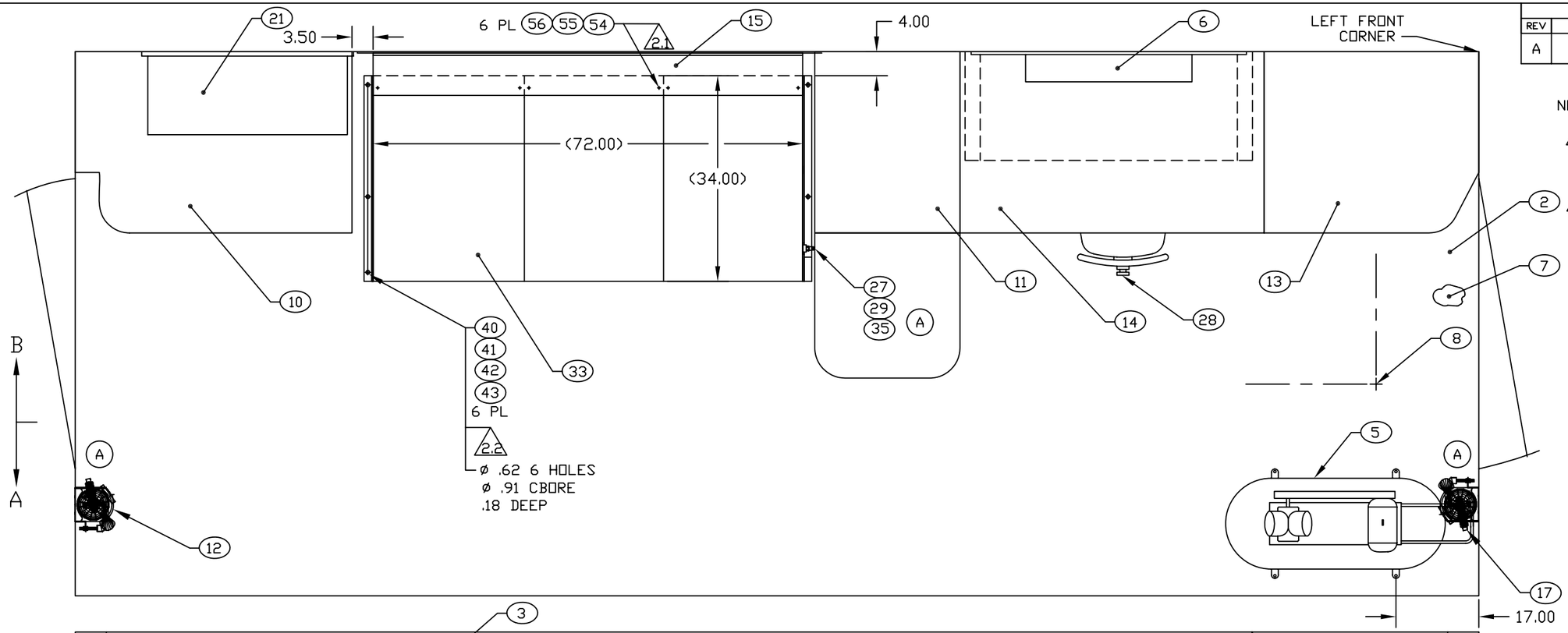

FLOOR PLAN

B SH 3

A SH 3

NOTES:

2.1 INSTALL BOLTS THRU TEST BENCH FROM INSIDE. USE TEST BENCH LIFTING EYE BOLTS AS TEMPLATE TO LOCATE HOLES.

2.2 USE FIND NO 4, AIR PLATFORM AS TEMPLATE TO LOCATE HOLES.

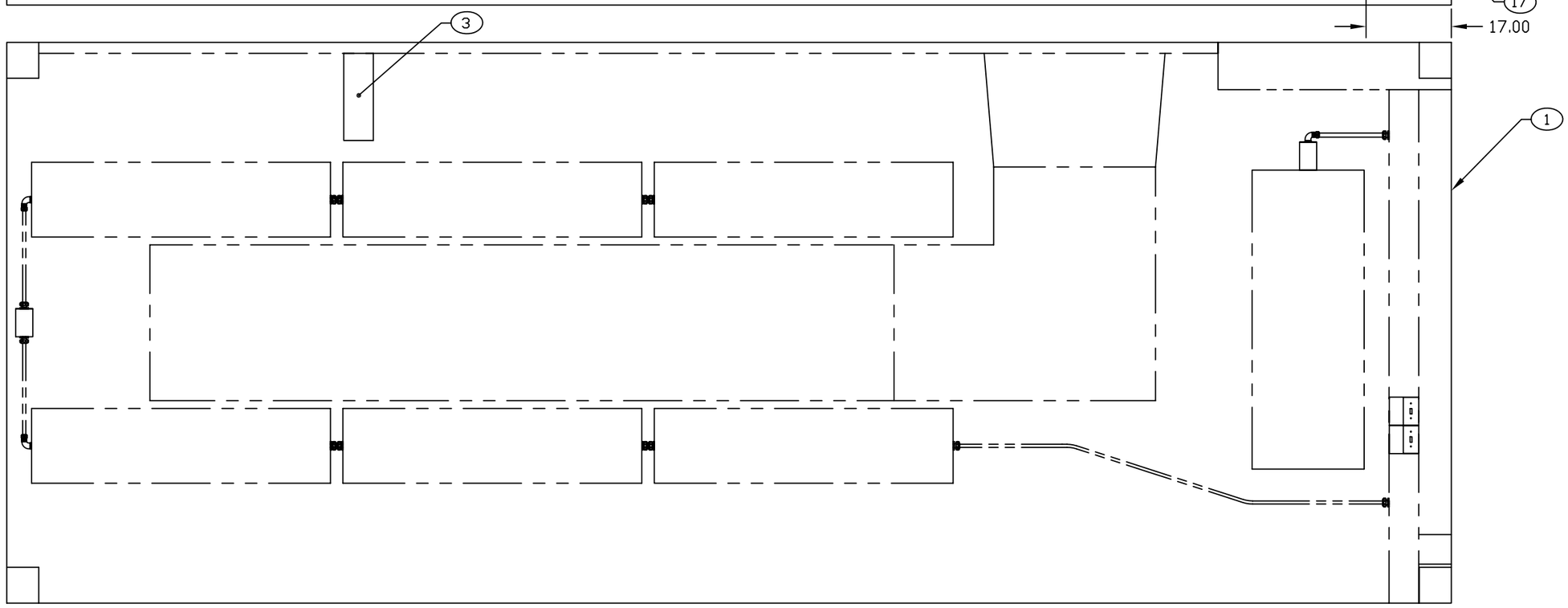

CEILING PLAN

EB242012.DWG

ENGINEER	DATE	DRAWN BY	DATE	SIZE	CAGE CODE	DWG NO	REV
PRV	92-08-04	PRV	95-04-03	D	91145	MFEB240201	A
NEXT ASSEMBLY FINAL		CHECKER MAB	94-08-15	SCALE 1/10		SH 2	

REVISIONS			
REV	DESCRIPTION	DATE	APPROVAL
A	REDRAWN WITH CHANGES.		

NOTES:

3.1 USE FIND NO 15, SWAY BRACE AS TEMPLATE TO LOCATE HOLES.

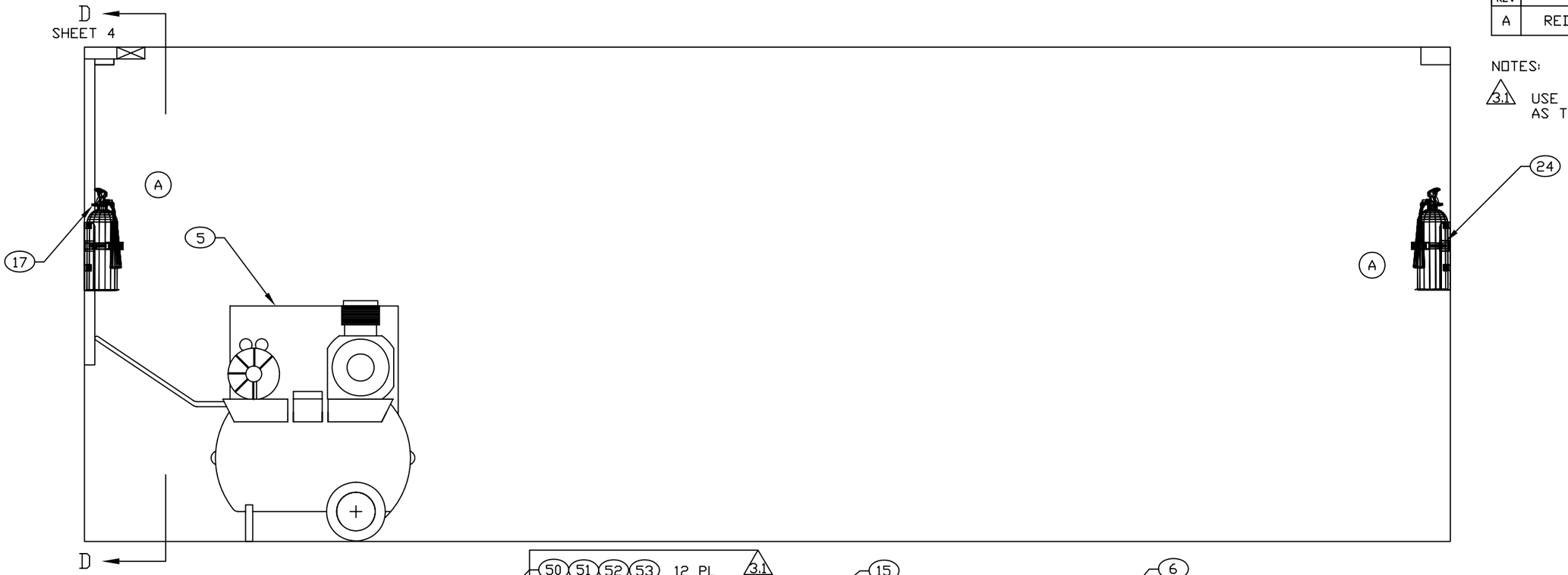

SECTION A-A
SHEET 2
ROTATED 180°

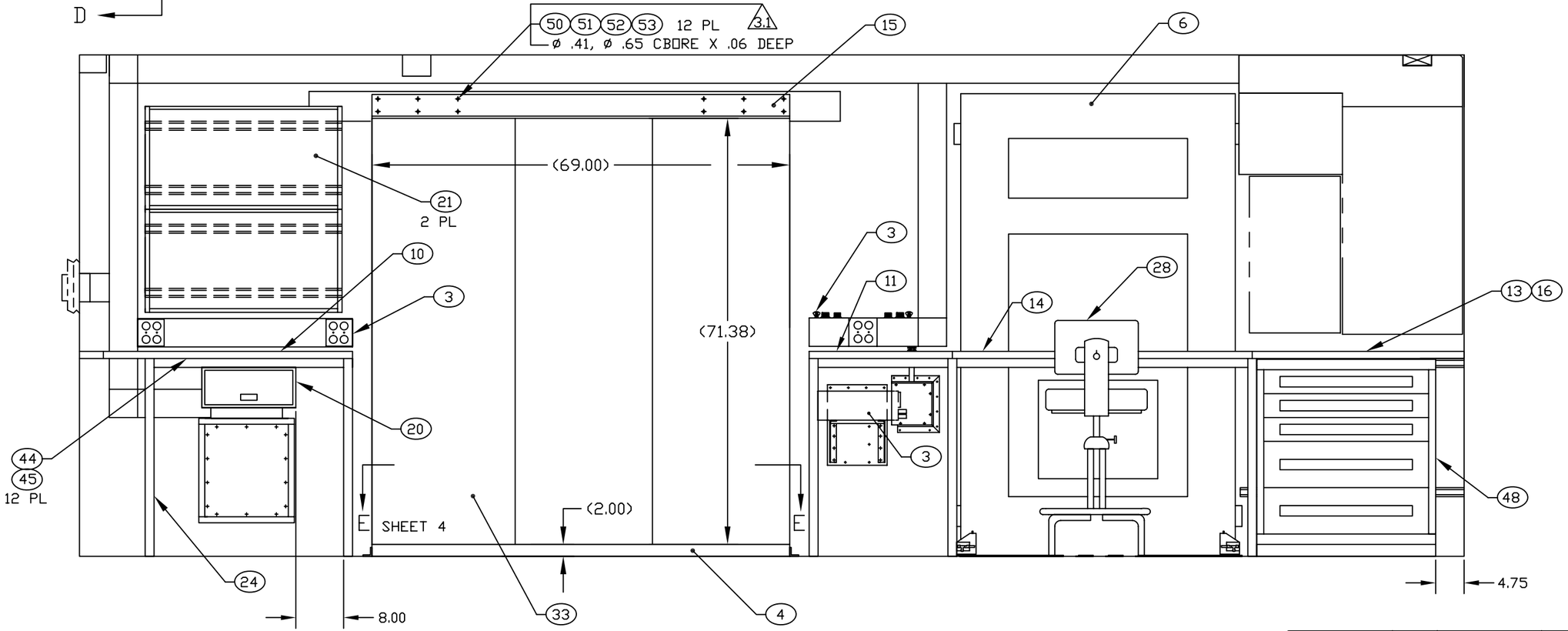

SECTION B-B
SHEET 2

ENGINEER	DATE	DRAWN BY	DATE	SIZE	CAGE CODE	DWG NO	REV
PRV	92-08-25	PRV	95-04-05	D	91145	MFEB240201	A
NEXT ASSEMBLY FINAL		CHECKER MAB	94-08-15	SCALE 1/10		SH 3	

EB242013.DWG