REVISIONS			
REV	DESCRIPTION	DATE	APPROVAL
E	(3) ITEM DELETED. (5) DIMENSION CHANGED.		

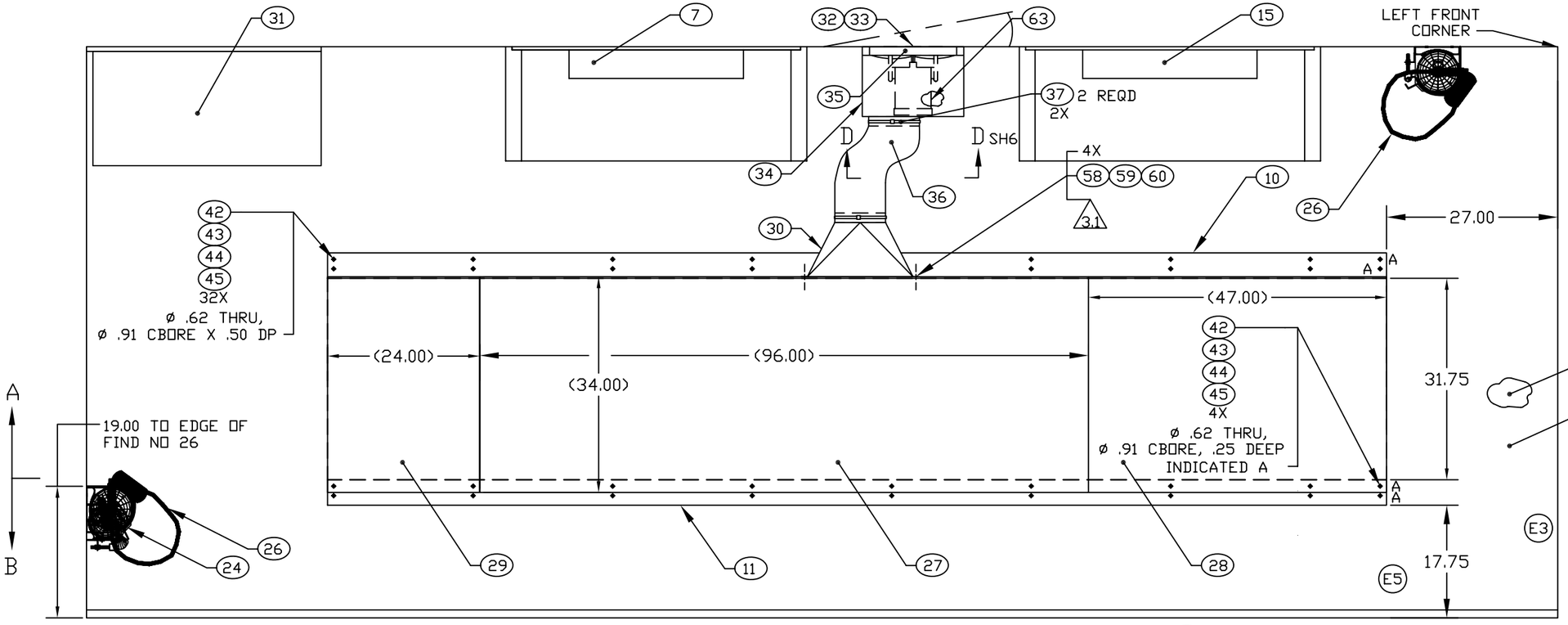

NOTES:

3.1 USE TEST BENCH AS TEMPLATE TO LOCATE HOLES.

3.2 USE FIND NO 72, AIR DUCT, AS TEMPLATE TO LOCATE HOLES.

FLOOR PLAN

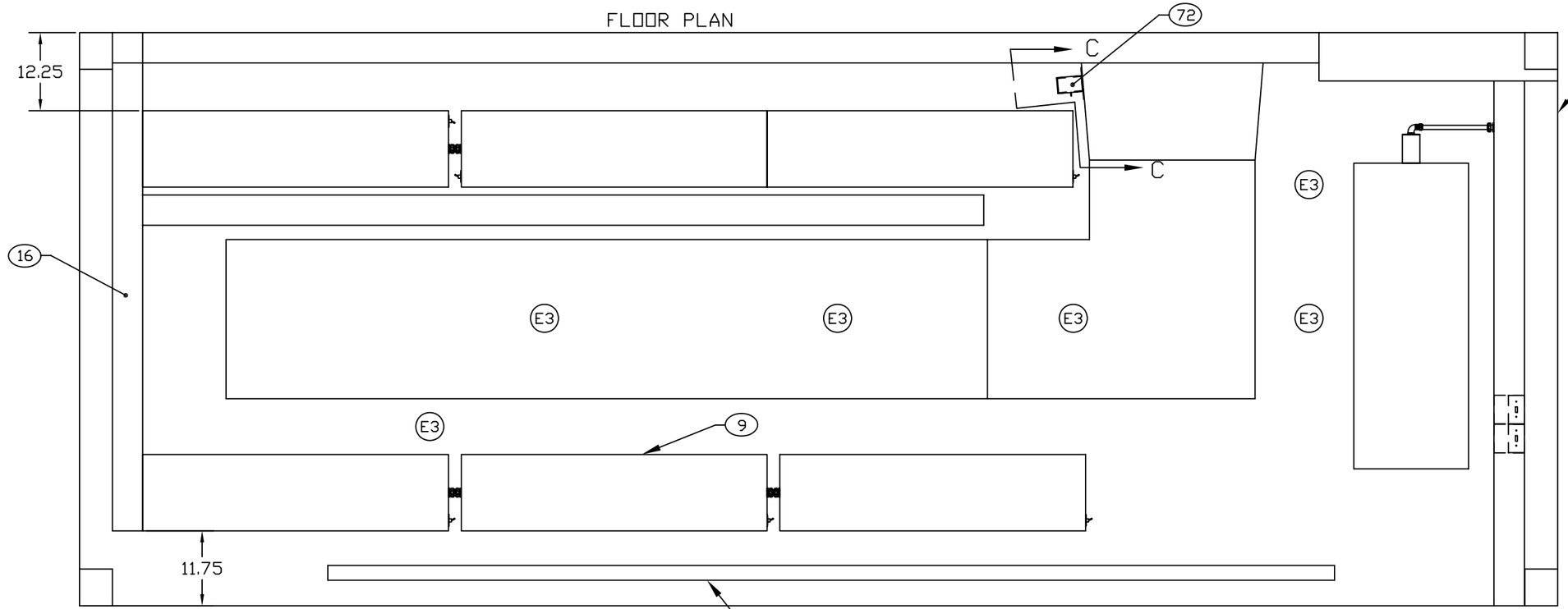

CEILING PLAN

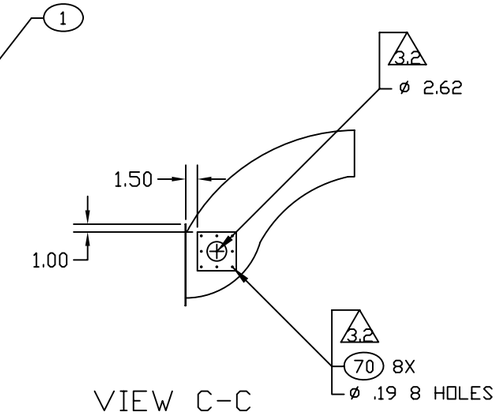

VIEW C-C
ROTATED 90° CCW

ENGINEER	DATE	DRAWN BY	DATE	SIZE	CAGE CODE	DWG NO	REV
PRV	94-06-22	EEM	99-02-24	D	91145	MFEB160201	E
NEXT ASSEMBLY FINAL		CHECKER MAB	94-07-29	SCALE 1/10		SH 3	

REVISIONS			
REV	DESCRIPTION	DATE	APPROVAL
E	(3) ITEM DELETED.		

NOTES:

4.1 USE FRONT CONSOLE BASE AS TEMPLATE TO LOCATE HOLES BOTH FRONT AND BACK.

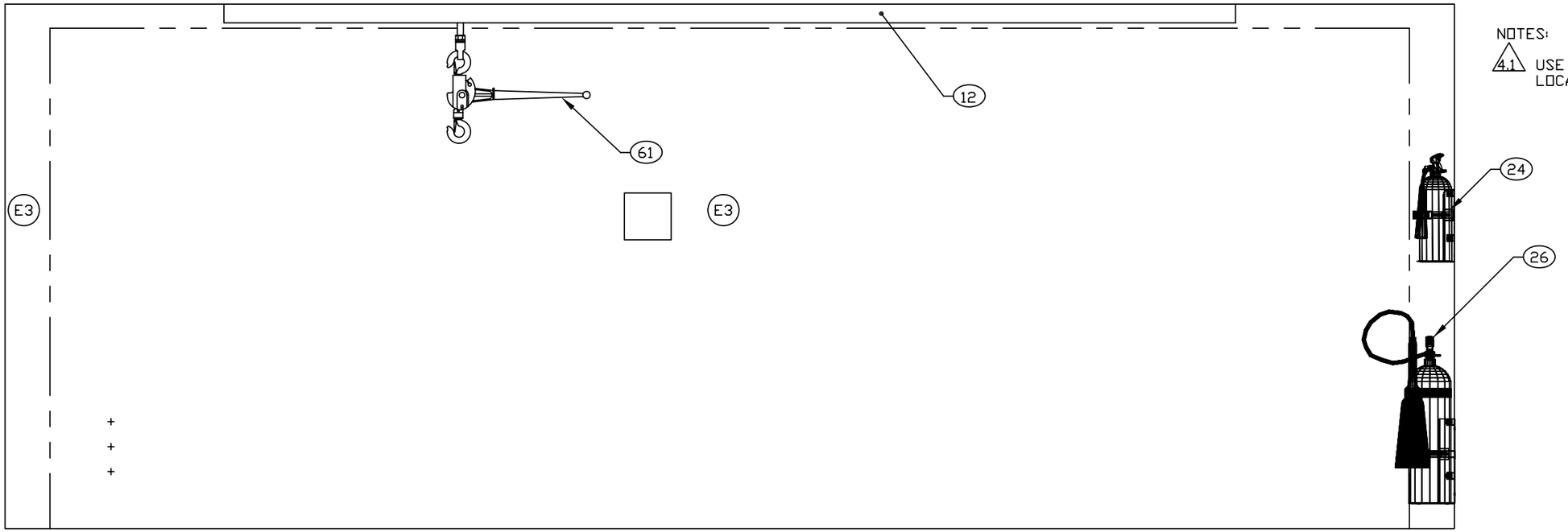

SECTION B-B SH 3
ROTATED 180°

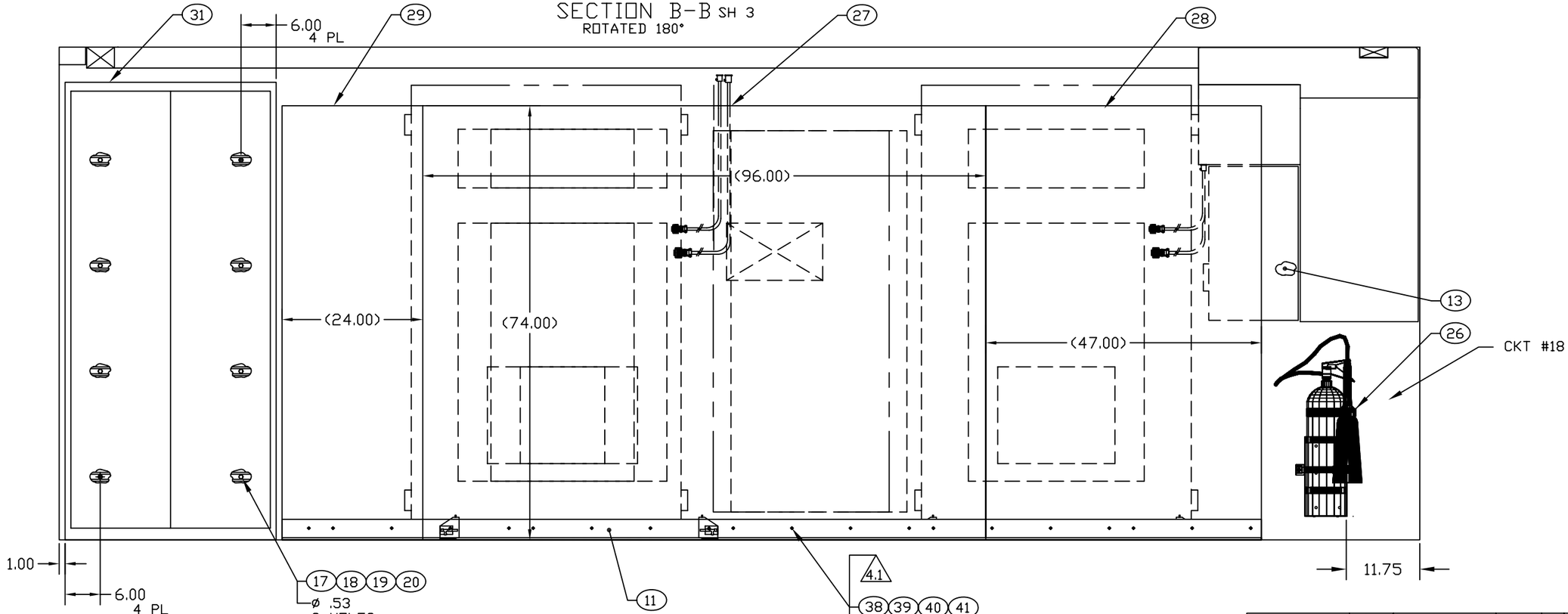

SECTION A-A SH 3

ENGINEER	DATE	DRAWN BY	DATE	SIZE	CAGE CODE	DWG NO	REV
PRV	94-06-22	EEM	99-03-17	D	91145	MFEB160201	E
NEXT ASSEMBLY		CHECKER		SCALE		SH	
FINAL		MAB	94-07-29	1/10		4	