REVISION HISTORY			
REV	DESCRIPTION	DATE	APPROVAL
A	REVISED AND PARTIALLY REDRAWN BY T H NGUYEN. (1) ITEM ADDED. (3) FIND NUMBER CHANGED.	04-05-24	R VOTAW

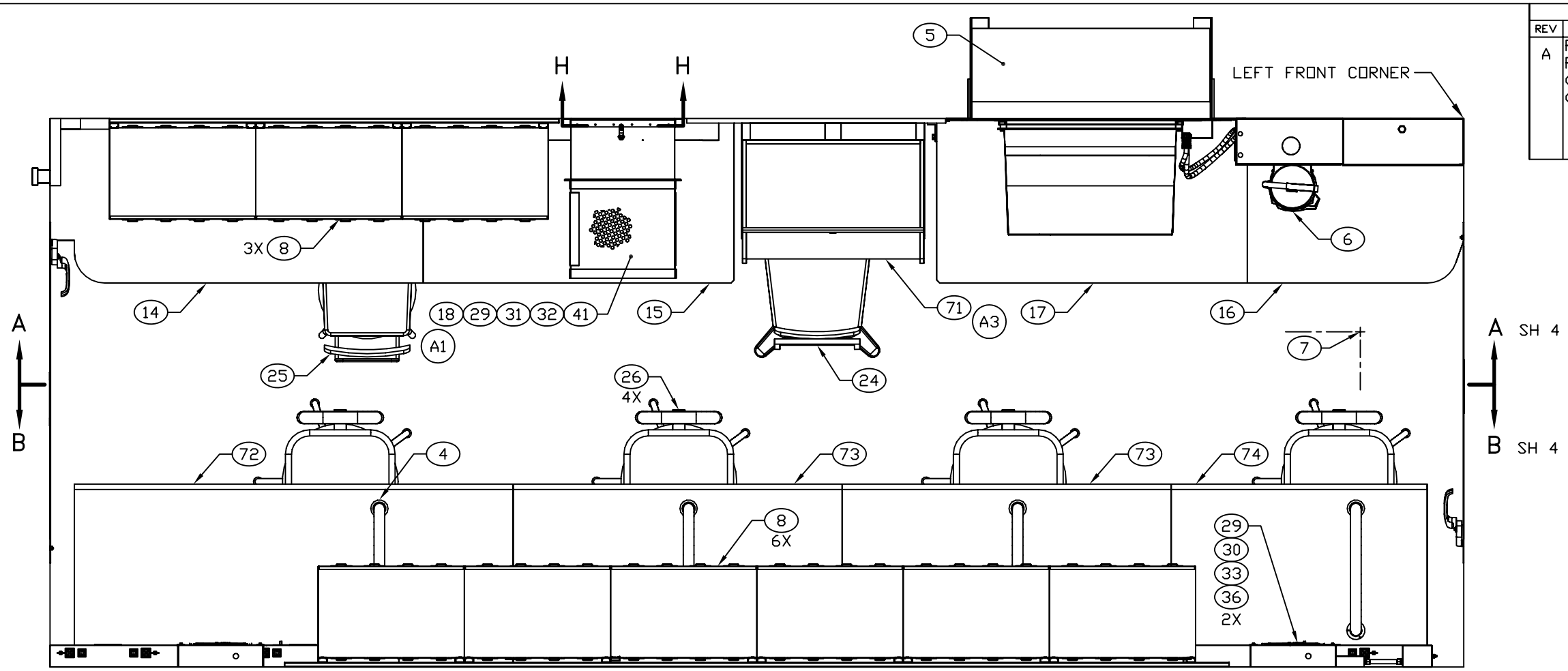

FLOOR PLAN

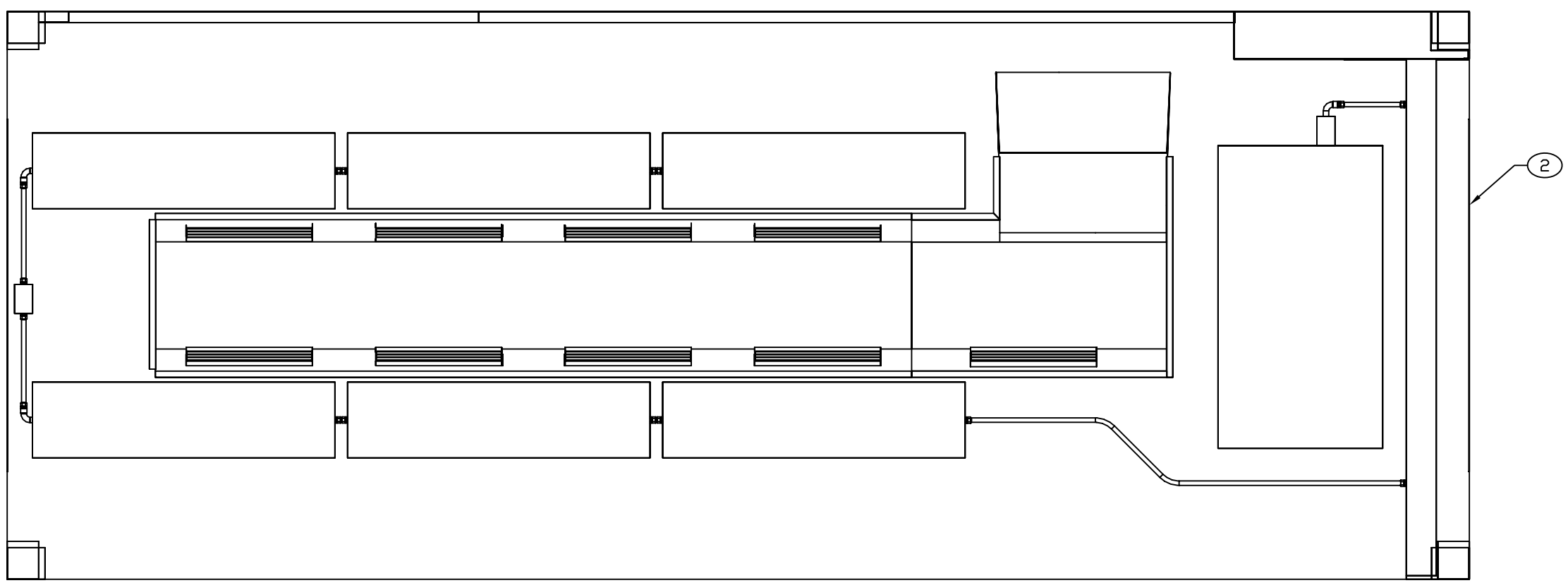

CEILING PLAN

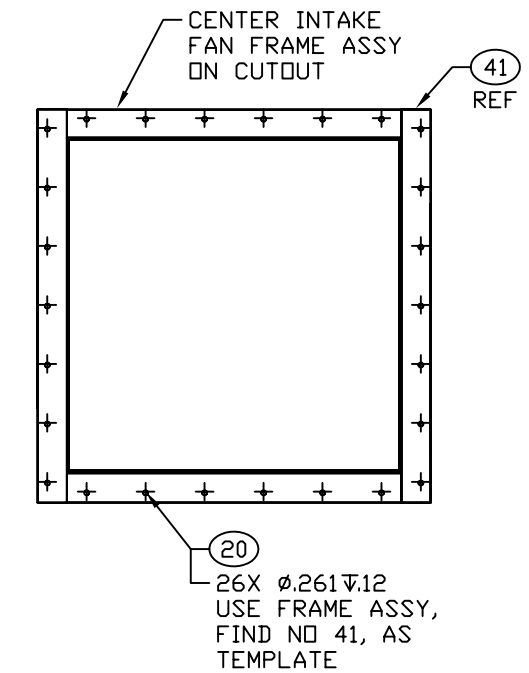

SECTION H–H
SCALE 1/5

ENGINEER	DATE	DRAWER	DATE	SIZE	CAGE CODE	DRAWING NUMBER	REV
T NGUYEN	02-01-11	TN	01-11-30	D	91145	MFCR011001	A
NEXT ASSEMBLY		CHECKER		SCALE		SHEET	
FINAL		MAB	01-11-30	1/11		3	

REVISION HISTORY			
REV	DESCRIPTION	DATE	APPROVAL
A	REVISED AND PARTIALLY REDRAWN BY T H NGUYEN. (1) ITEM ADDED. (2) ITEM DELETED. (3) FIND NUMBER CHANGED. (8) SECTION E-E DELETED.	04-05-24	R VOTAW

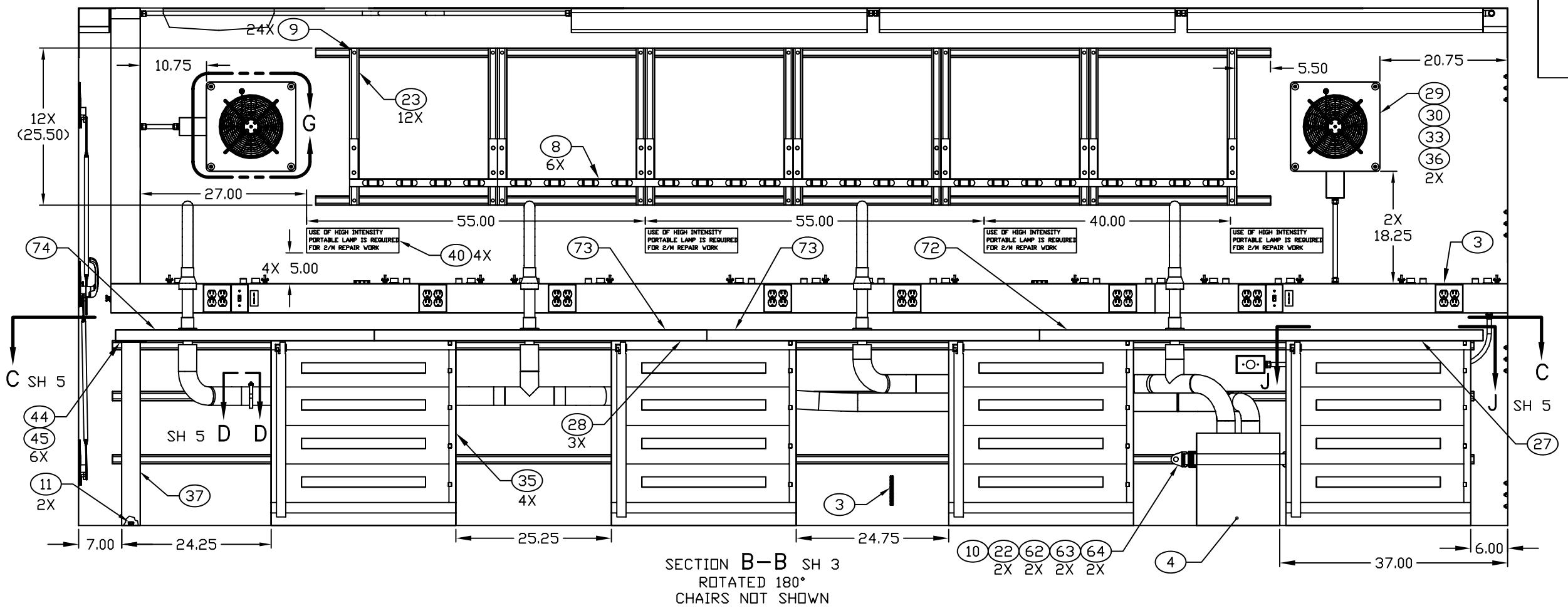

SECTION B–B SH 3
ROTATED 180°
CHAIRS NOT SHOWN

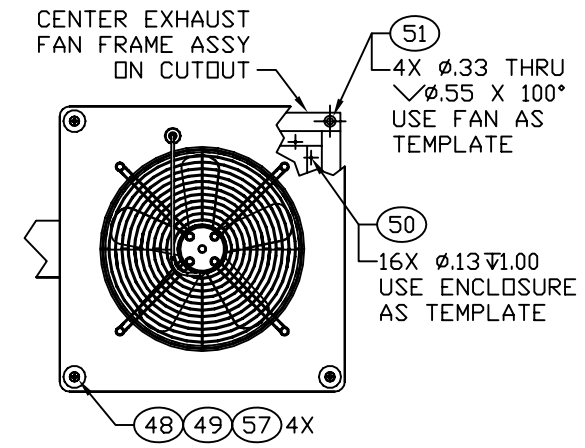

2X VIEW G
SCALE 1/5

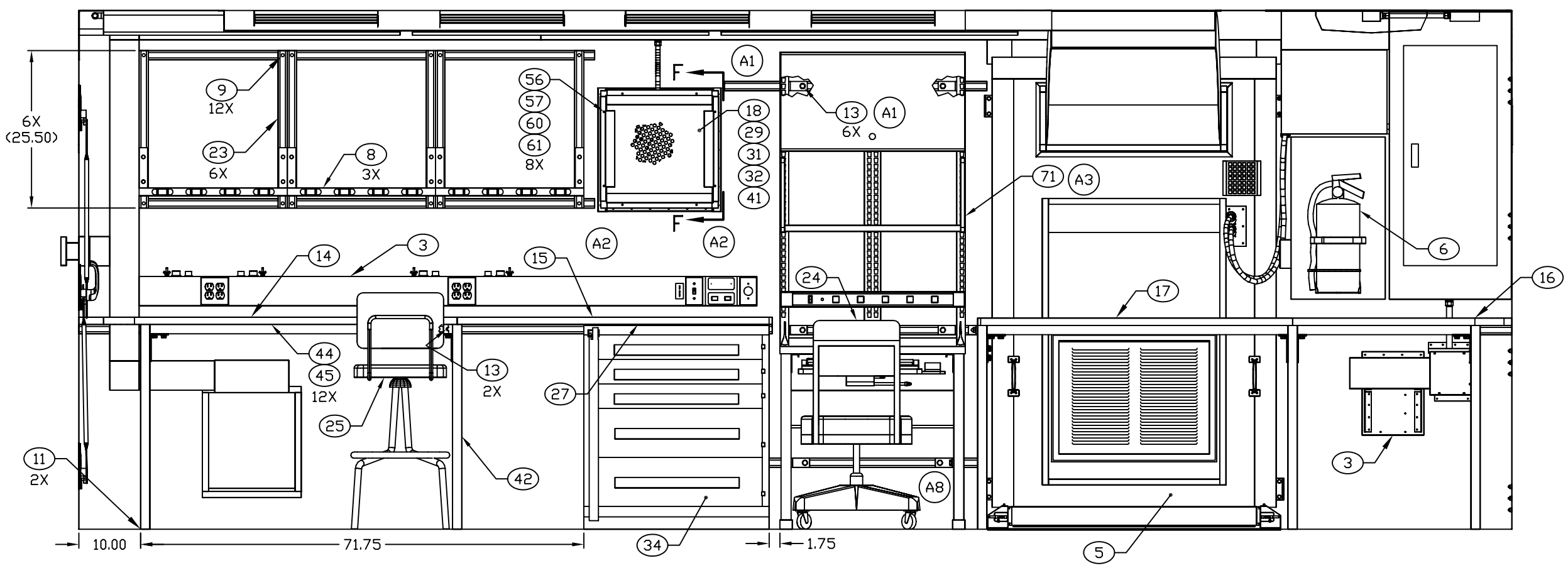

SECTION A–A SH 3

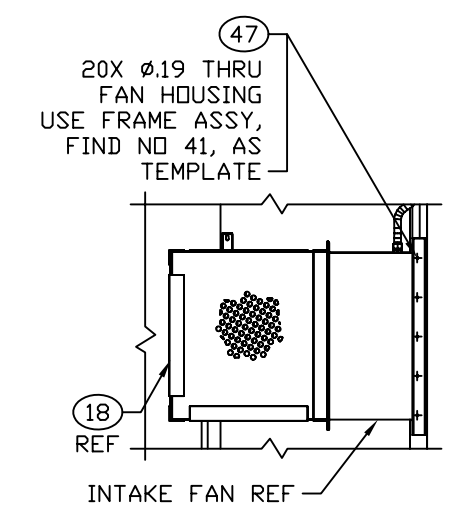

SECTION F–F

ENGINEER	DATE	DRAWER	DATE	SIZE	CAGE CODE	DRAWING NUMBER	REV
T NGUYEN	02-01-11	TN	02-01-11	D	91145	MFCR011001	A
NEXT ASSEMBLY FINAL		CHECKER MAB	02-01-11	SCALE 1/10		SHEET 4	