REVISION HISTORY			
REV	DESCRIPTION	DATE	APPROVAL

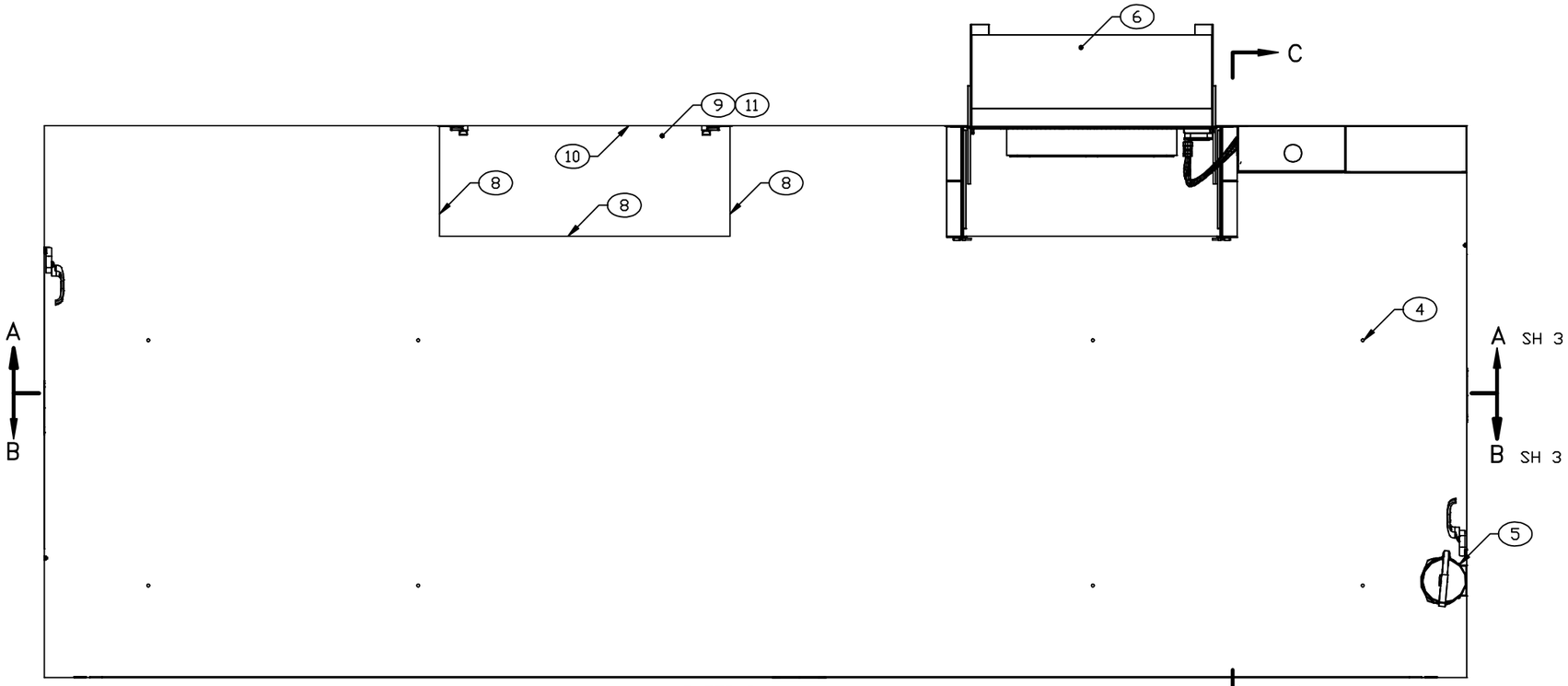

FLOOR PLAN

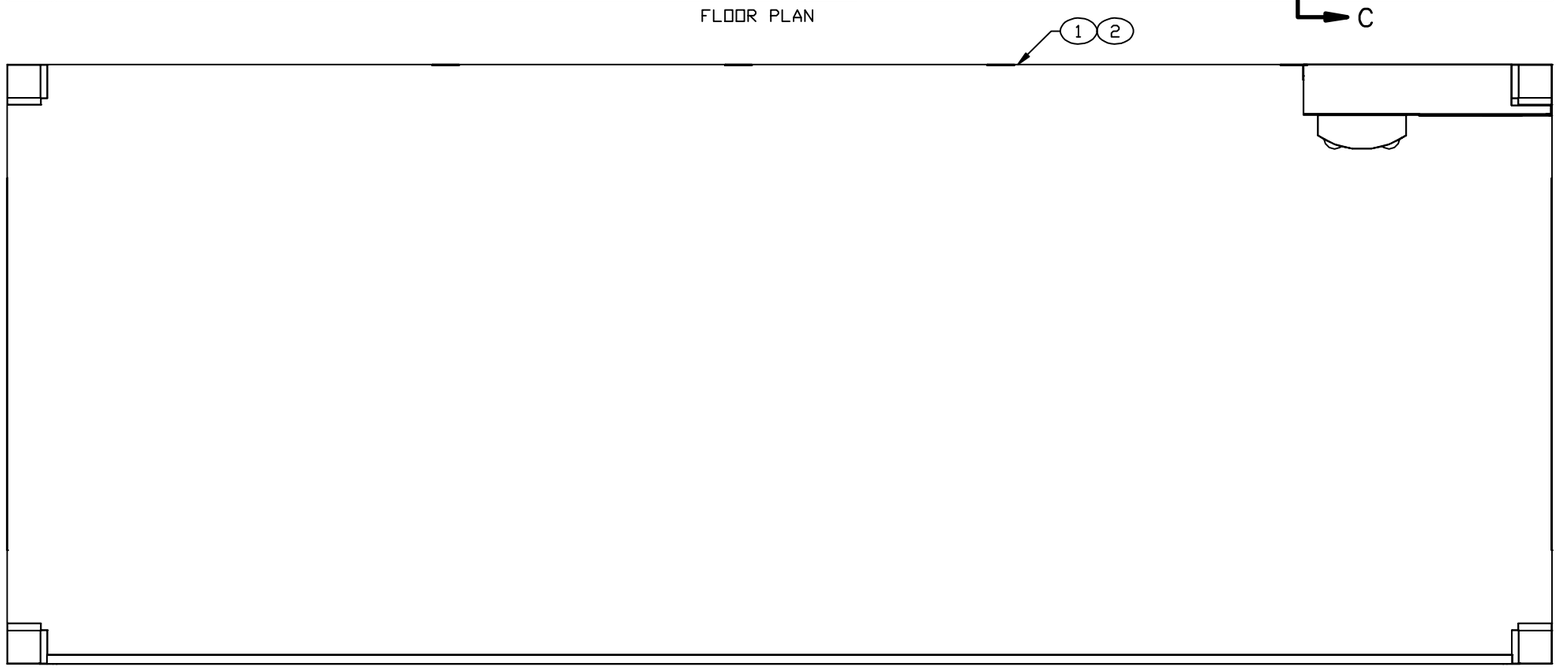

CEILING PLAN

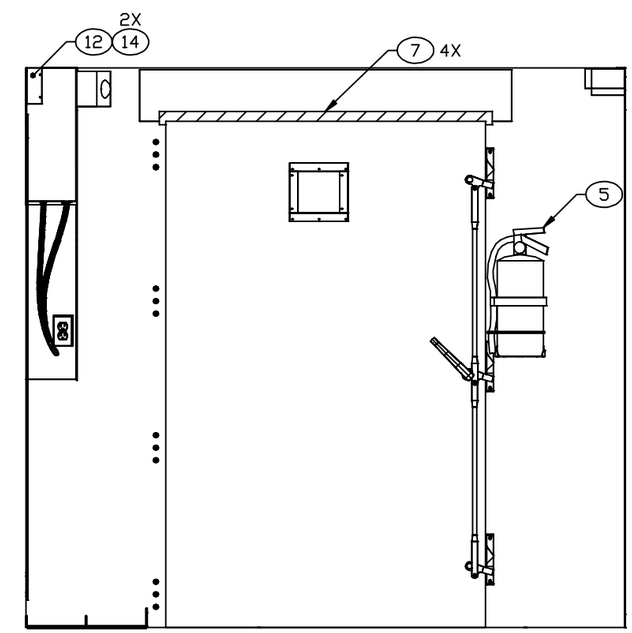

SECTION C–C
ROTATED 90° CCW

ENGINEER	DATE	DRAWER	DATE	SIZE	CAGE CODE	DRAWING NUMBER	REV
M BEUSTER	2008-08-27	MAB	2008-08-27	D	91145	MF BF170101	–
NEXT ASSEMBLY		CHECKER		SCALE		SHEET	
FINAL		PRV	2008-08-27	1/11		2	

REVISION HISTORY			
REV	DESCRIPTION	DATE	APPROVAL

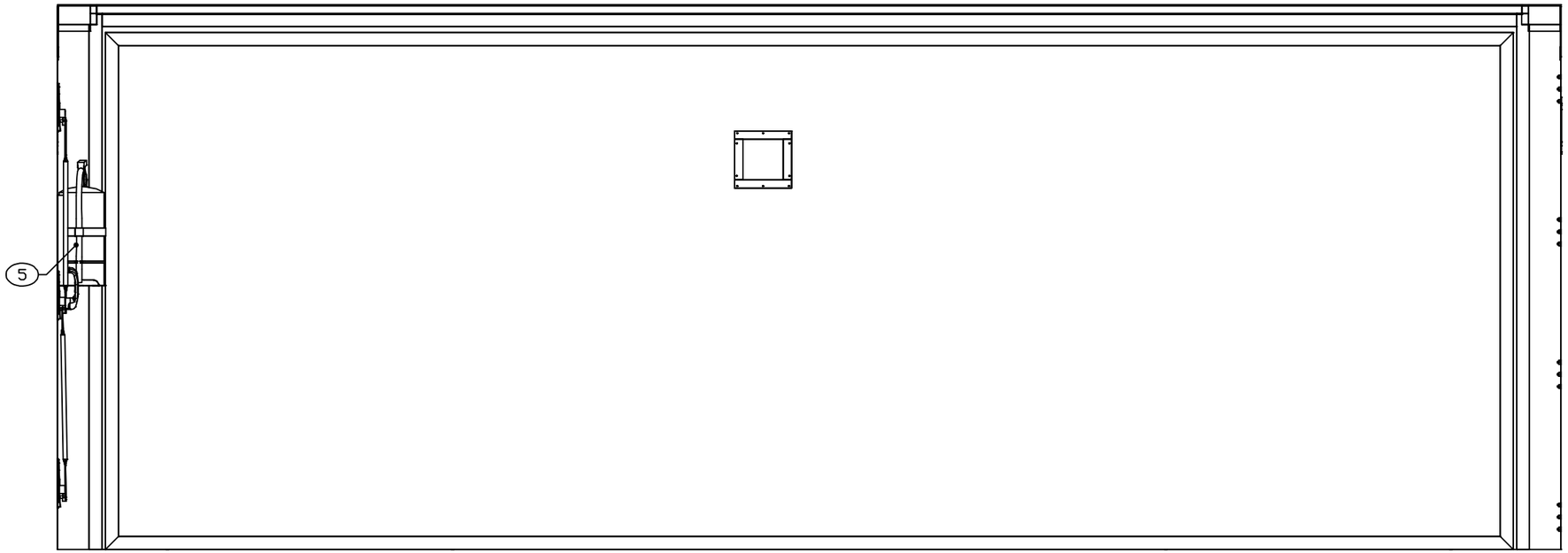

SECTION B–B SH 2
ROTATED 180°

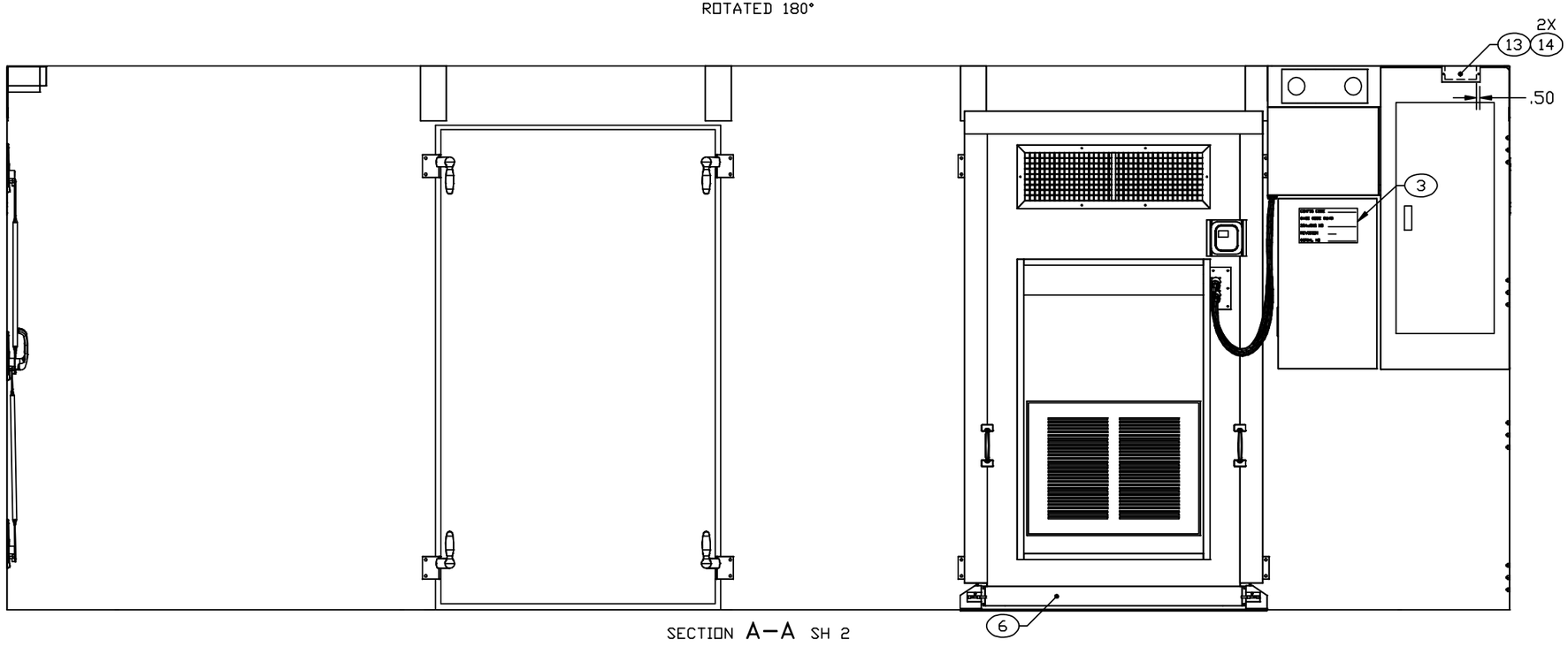

SECTION A–A SH 2

ENGINEER	DATE	DRAWER	DATE	SIZE	CAGE CODE	DRAWING NUMBER	REV
M BEUSTER	2008-08-27	MAB	2008-08-27	D	91145	MF BF170101	–
NEXT ASSEMBLY		CHECKER		SCALE		SHEET	
FINAL		PRV	2008-08-27	1/10		3	