REVISION HISTORY			
REV	DESCRIPTION	DATE	APPROVAL
A	REVISED AND PARTIALLY REDRAWN BY M. BEUSTER. (2) DIMENSION CHANGED.	03-05-16	R A VOTAW

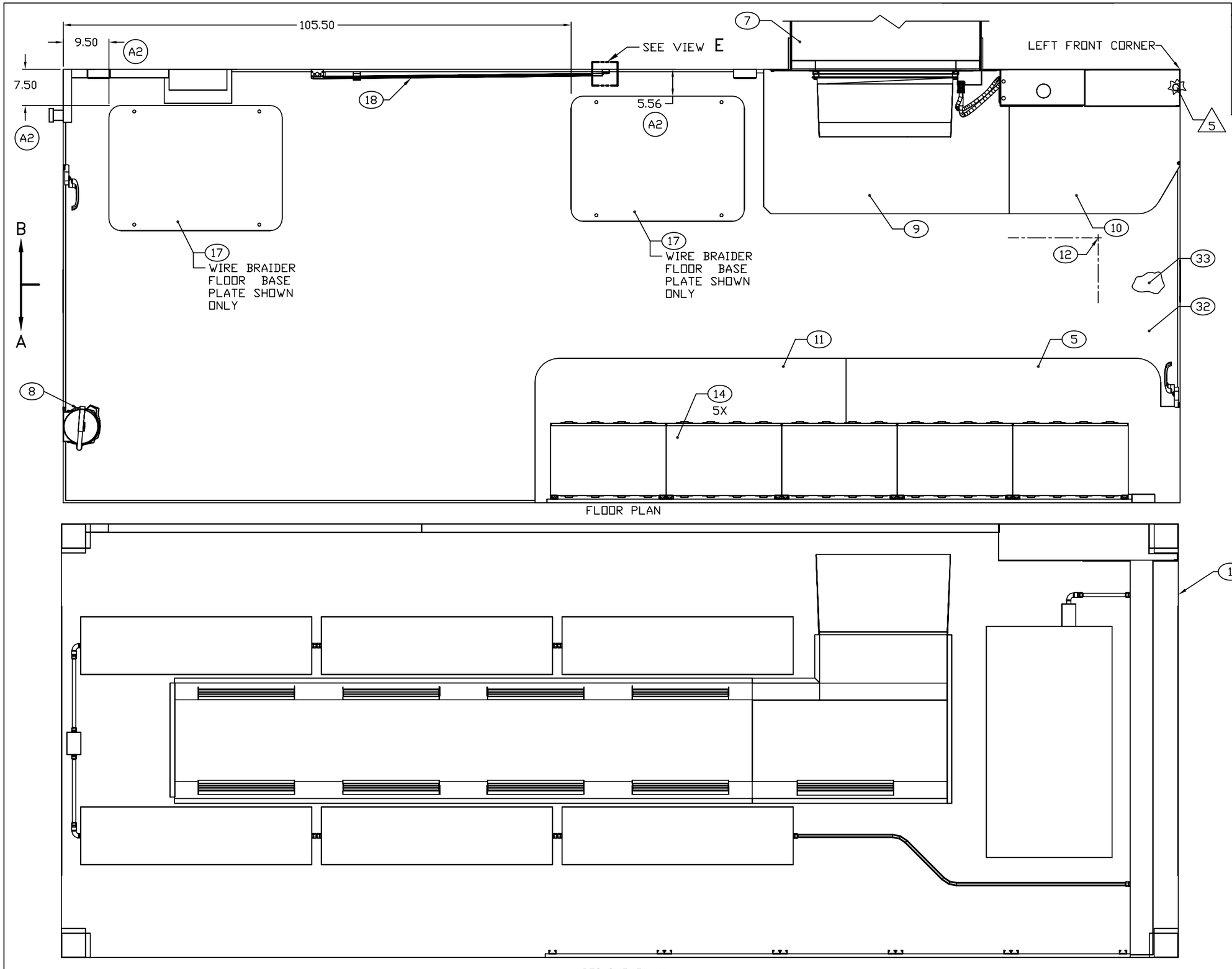

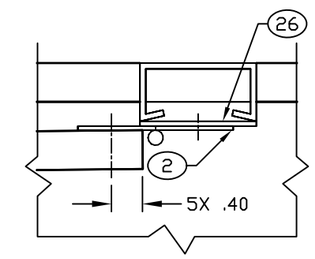

VIEW E
SCALE 1/1

ENGINEER	DATE	DRAWER	DATE	SIZE	CAGE CODE	DRAWING NUMBER	REV
P. VICENCIO	02-10-30	PRV	02-10-30	D	91145	MFWR010201	A
NEXT ASSEMBLY: FINAL		CHECKER: THN	02-10-30	SCALE 1/10		SHEET 2	

REVISION HISTORY			
REV	DESCRIPTION	DATE	APPROVAL
A	REVISED AND PARTIALLY REDRAWN BY M. BEUSTER. (3) VIEW REDRAWN.	03-05-16	R A VOTAW

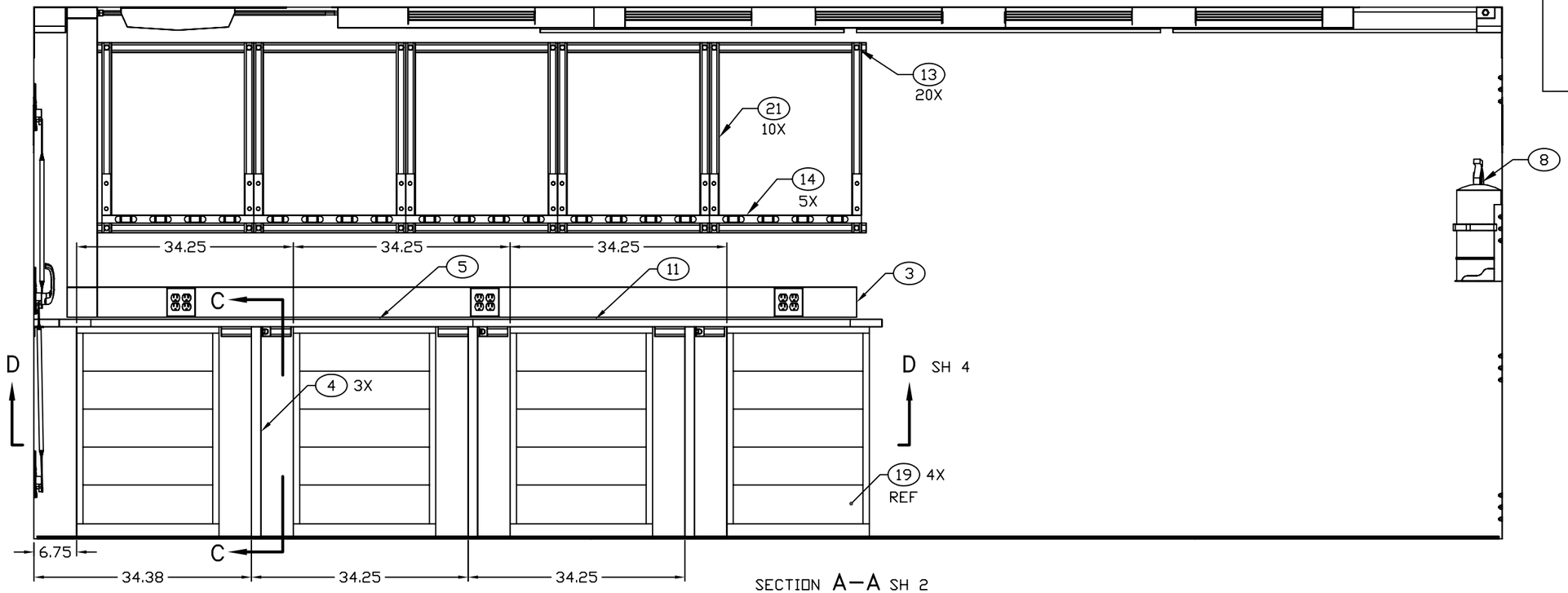

SECTION A–A SH 2
ROTATED 180°

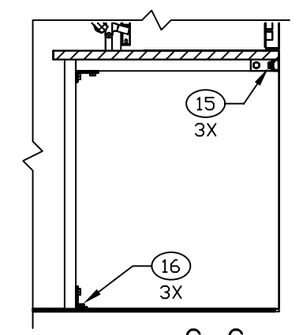

SECTION C–C

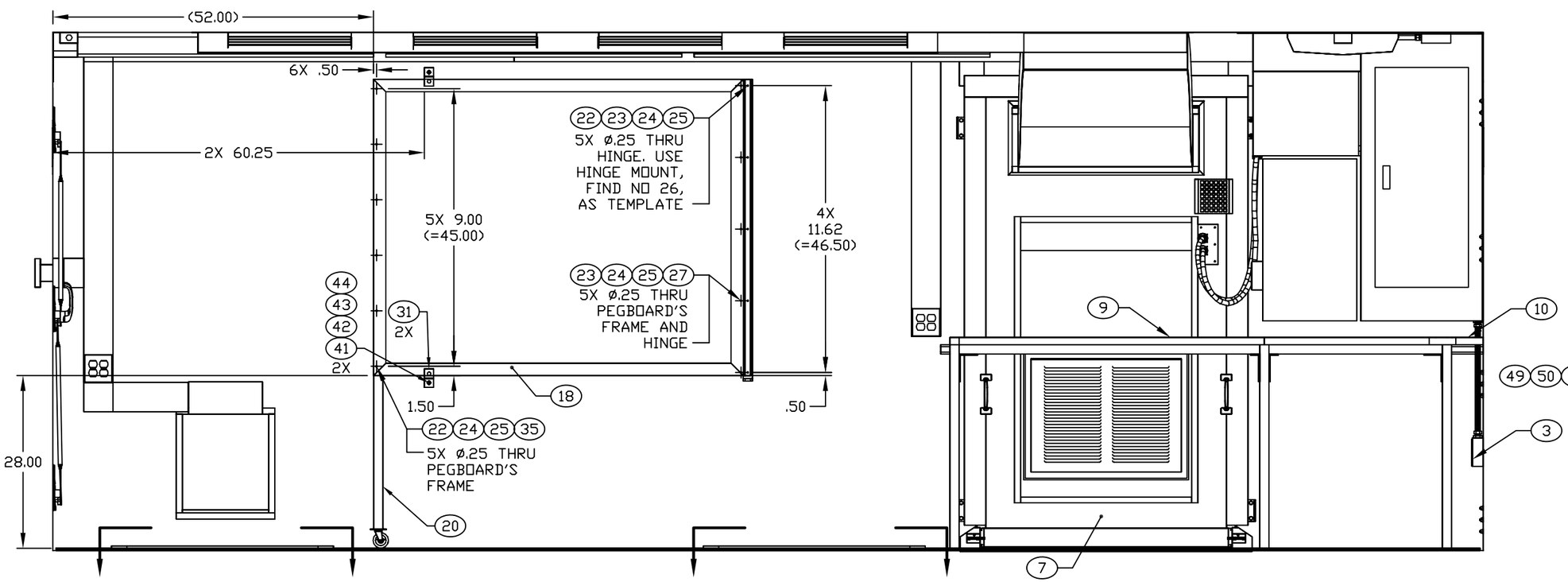

SECTION B–B SH 2

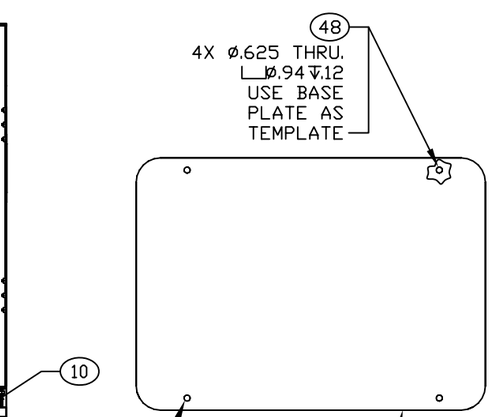

SECTION H–H (A3)
SCALE: 1/8

ENGINEER	DATE	DRAWER	DATE	SIZE	CAGE CODE	DRAWING NUMBER	REV
P. VICENCIO	02-10-30	PRV	02-10-30	D	91145	MFWR010201	A
NEXT ASSEMBLY		CHECKER		SCALE		SHEET	
FINAL		THN	02-10-30	1/10		3	