REVISION HISTORY			
REV	DESCRIPTION	DATE	APPROVAL
E	REVISED AND PARTIALLY REDRAWN BY M. BEUSTER. LIGHTS CHANGED.	2007-02-13	R A VOTAW

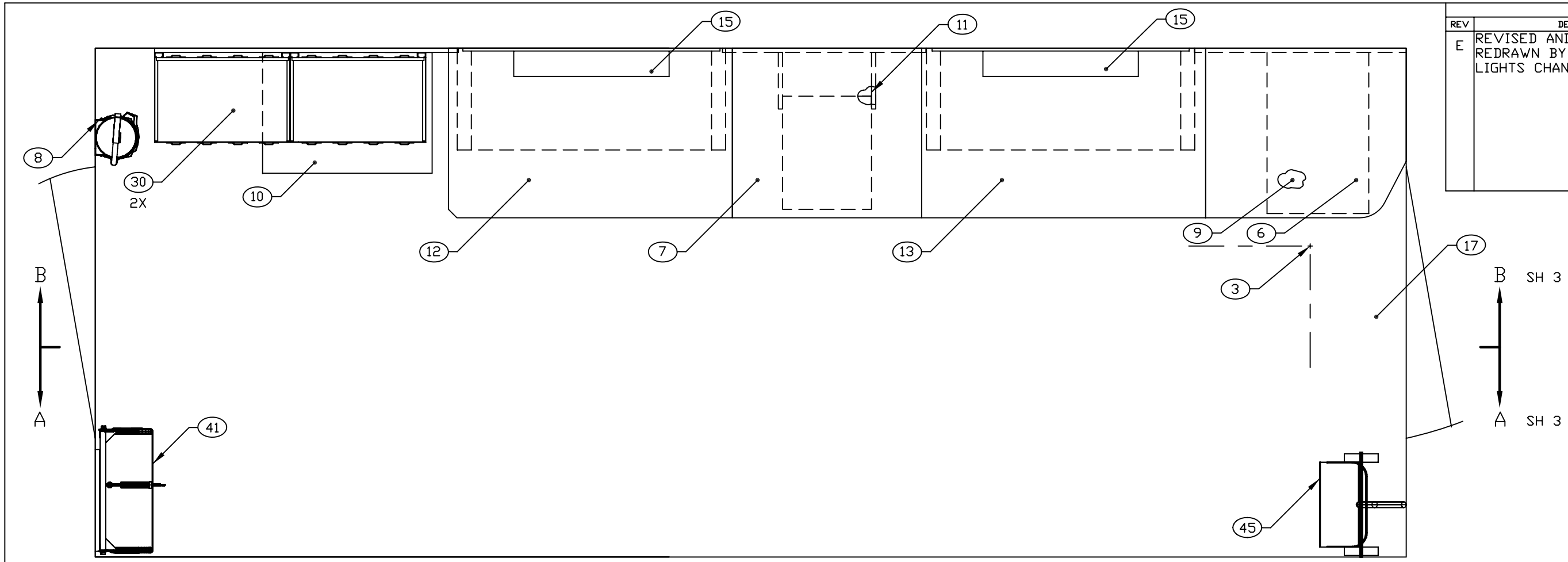

FLOOR PLAN

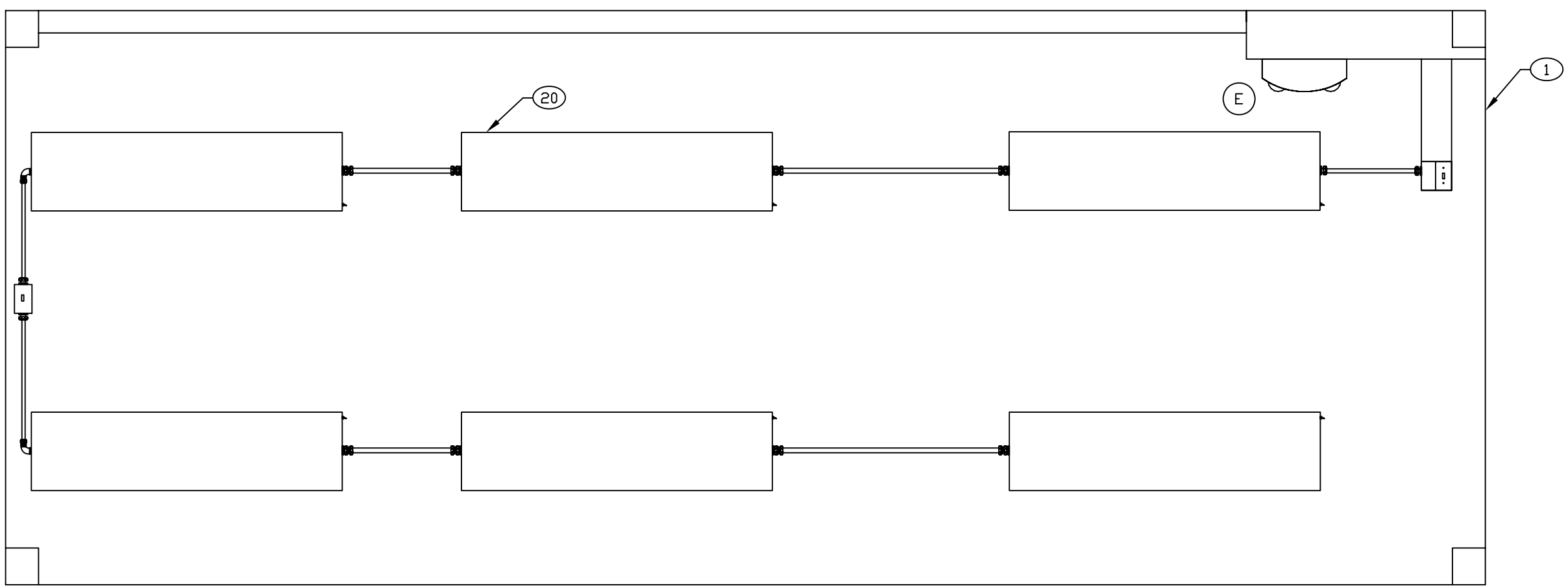

CEILING PLAN

ENGINEER	DATE	DRAWN BY	DATE	SIZE	CAGE CODE	DWG NO	REV
J. SNIDER	92-01-14	PRV	95-06-30	D	91145	MFWL050101	E
NEXT ASSEMBLY FINAL		CHECKER MAB	92-03-24	SCALE 1/10		SH 2	

REVISION HISTORY			
REV	DESCRIPTION	DATE	APPROVAL
E	REVISED AND PARTIALLY REDRAWN BY M. BEUSTER. (5) ITEM ADDED.	2007-02-13	R A VOTAW

NOTES:

3.1 2X ø.625 ↧1.18

3.2 2X ø.625 ↧.93

3.3 SEAL AROUND EDGES OF THE FAN AND FRAME USING FIND NO 43.

3.4 CENTER FILTER GUARD HORIZONTALLY ACROSS ENCLOSURE FLANGE THAT SUPPORTS FILTER. FASTEN WITH FIND NO 33.

SECTION A-A SHEET 2
ROTATED 180°

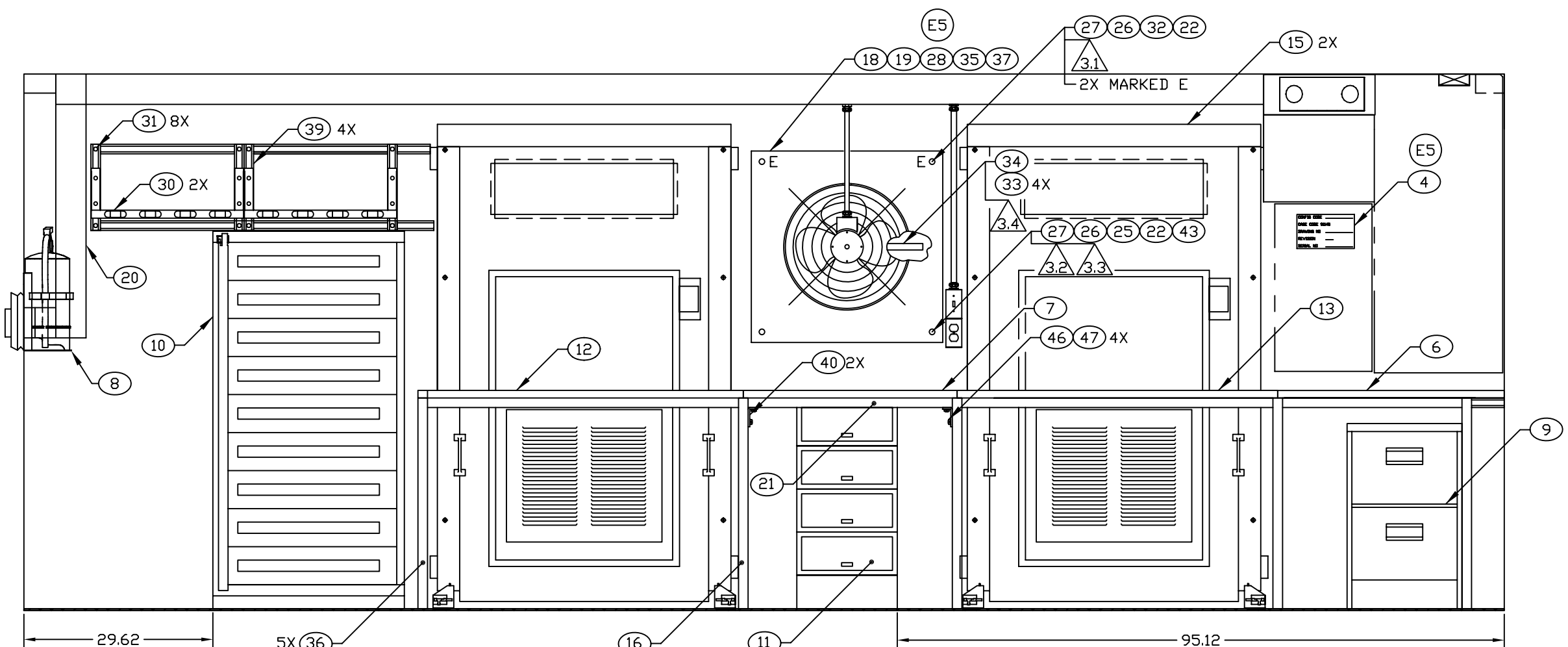

SECTION B-B SHEET 2

ENGINEER	DATE	DRAWN BY	DATE	SIZE	CAGE CODE	DWG NO	REV
J. SNIDER	92-01-16	PRV	95-06-30	D	91145	MF WL050101	E
NEXT ASSEMBLY FINAL		CHECKER MAB	92-03-24	SCALE 1/10		SH 3	