REVISION HISTORY			
REV	DESCRIPTION	DATE	APPROVAL
G	REVISED BY AND PARTIALLY REDRAWN BY M. BEUSTER. (1) ITEM ADDED.	2007-02-12	R A VOTAW

NOTES:

3.1 USE ITEM AS A TEMPLATE DURING INSTALLATION. INCLUDE ALL FASTENERS IN PACKOUT.

3.3 CUT TO FIT AT TIME OF INSTALLATION.

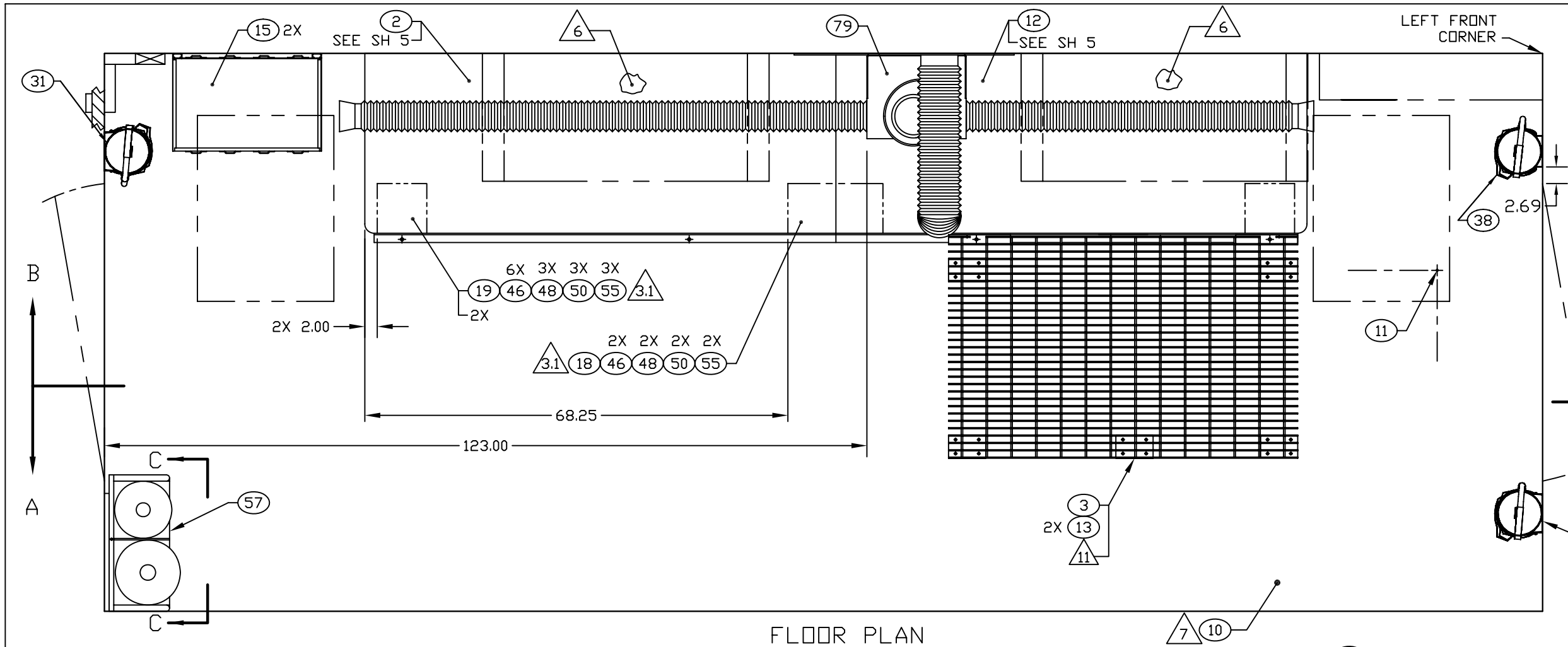

FLOOR PLAN

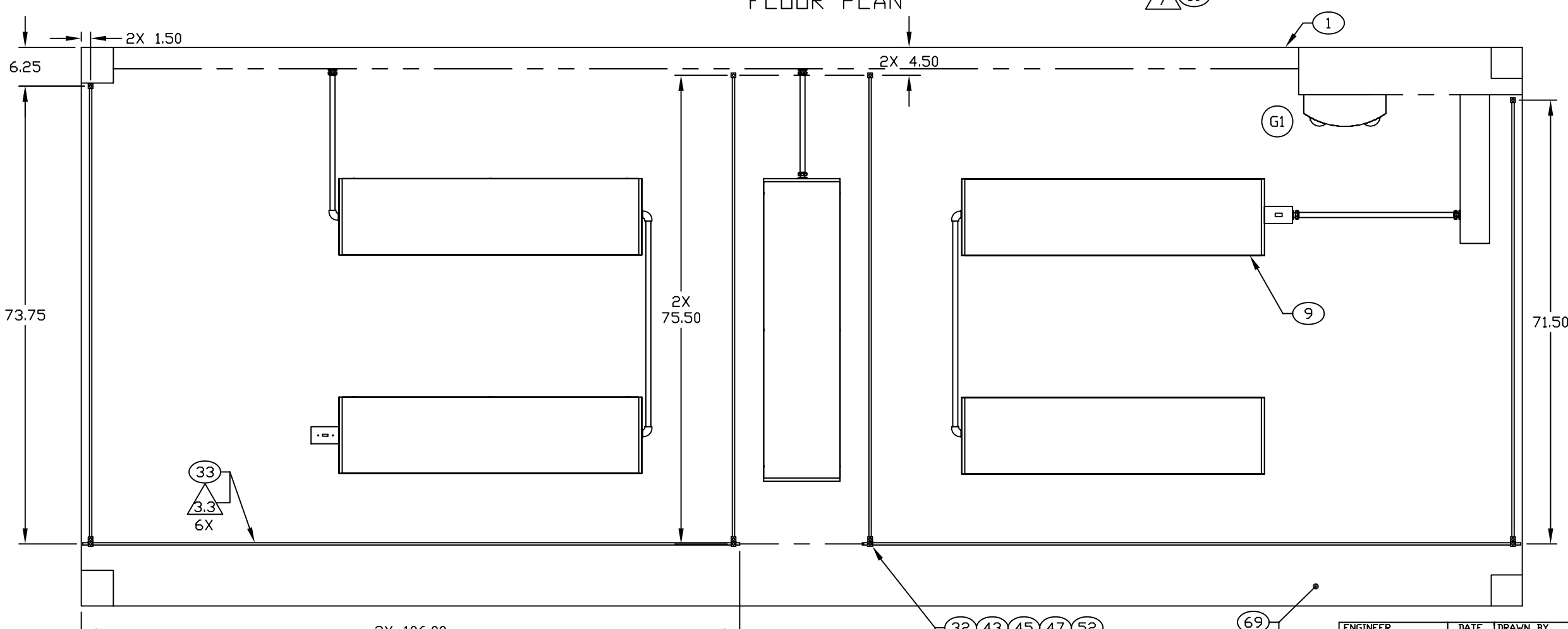

CEILING PLAN

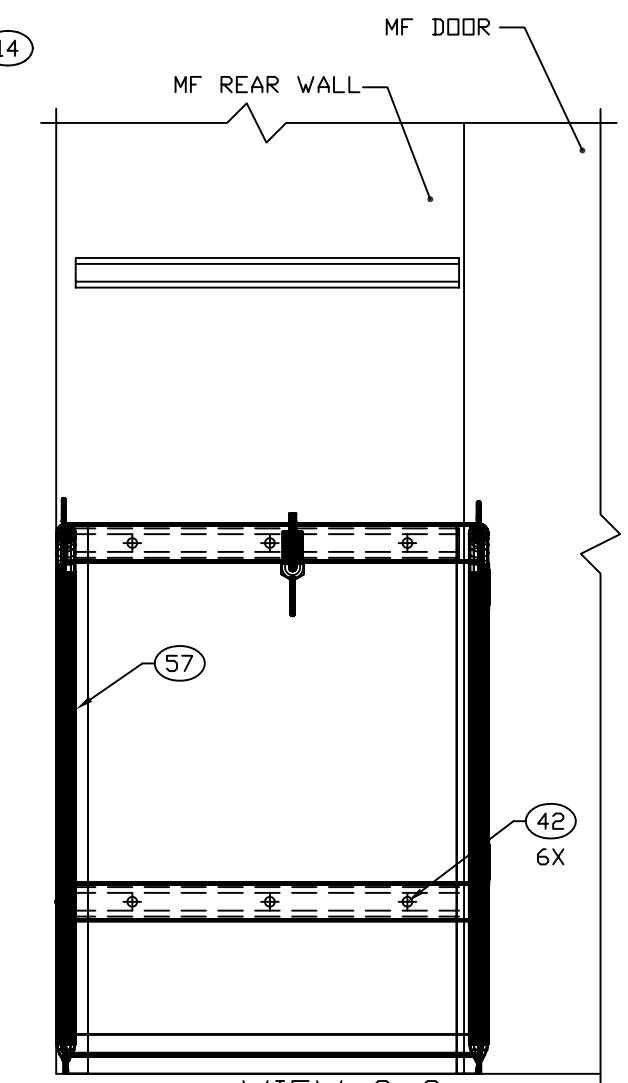

VIEW C-C
ROTATED 90° CW
SCALE 1/5
CYLINDERS NOT SHOWN

ENGINEER	DATE	DRAWN BY	DATE	SIZE	CAGE CODE	DWG NO	REV
J. SNIDER	92-02-11	TN	97-02-26	D	91145	MFWL040101	G
NEXT ASSEMBLY		CHECKER		SCALE		SH	
FINAL		MAB	92-03-24	1/10		3	

REVISION HISTORY			
REV	DESCRIPTION	DATE	APPROVAL
G	REVISED BY AND PARTIALLY REDRAWN BY M. BEUSTER. (1) ITEM ADDED.	2007-02-12	R A VOTAW

NOTE(S):

4.1 THIS AREA IS RESERVED FOR A CUSTOMER FURNISHED AND INSTALLED WELDER.

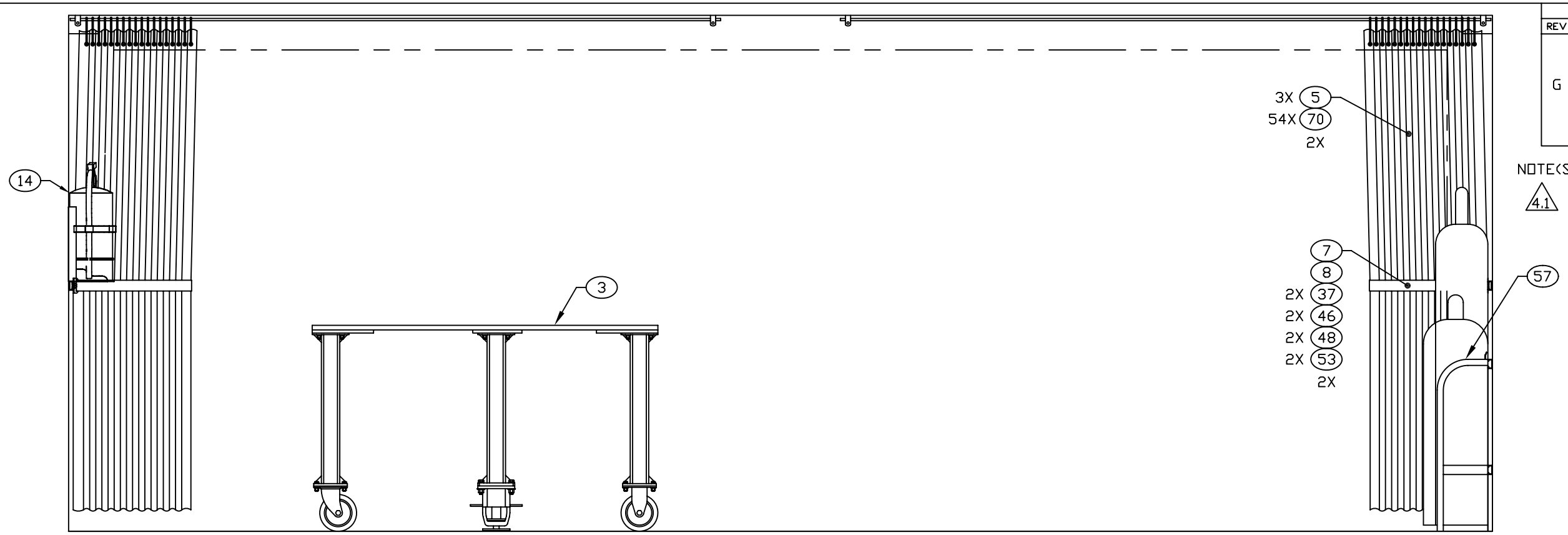

SECTION A–A SH 3
ROTATED 180°

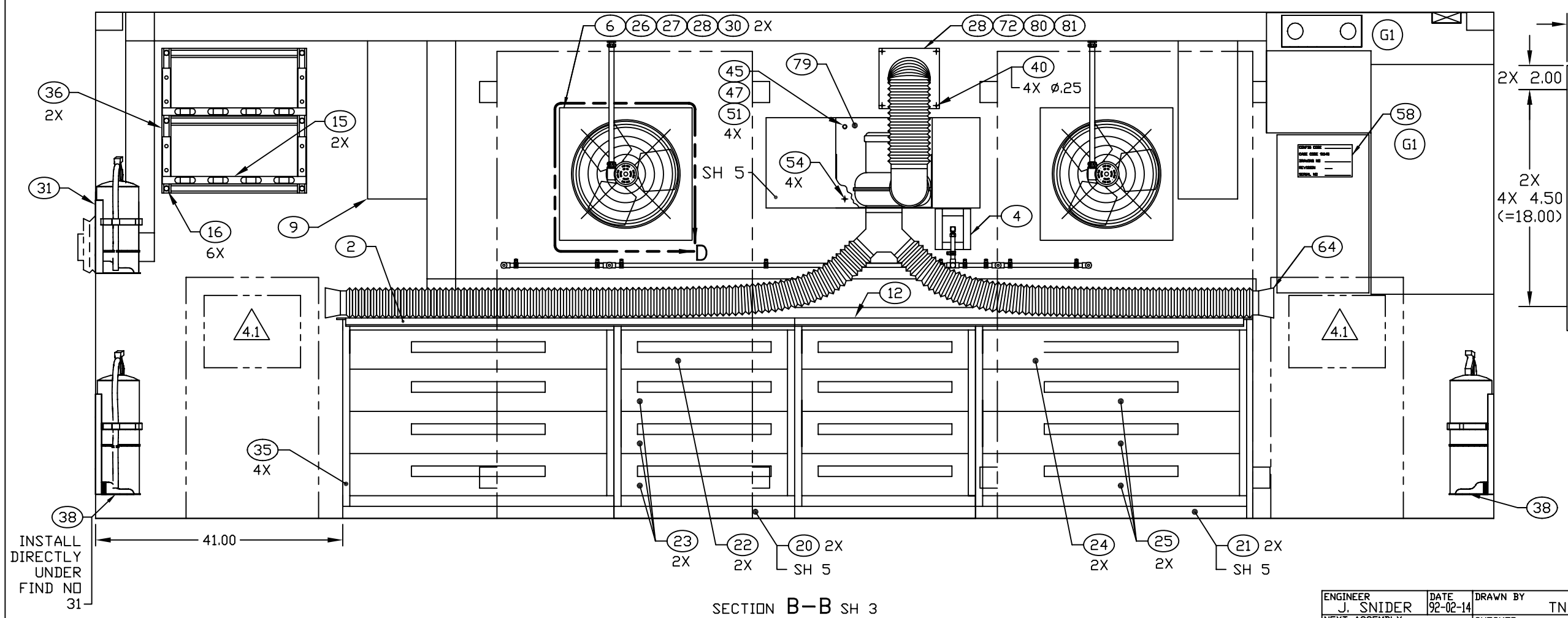

SECTION B–B SH 3

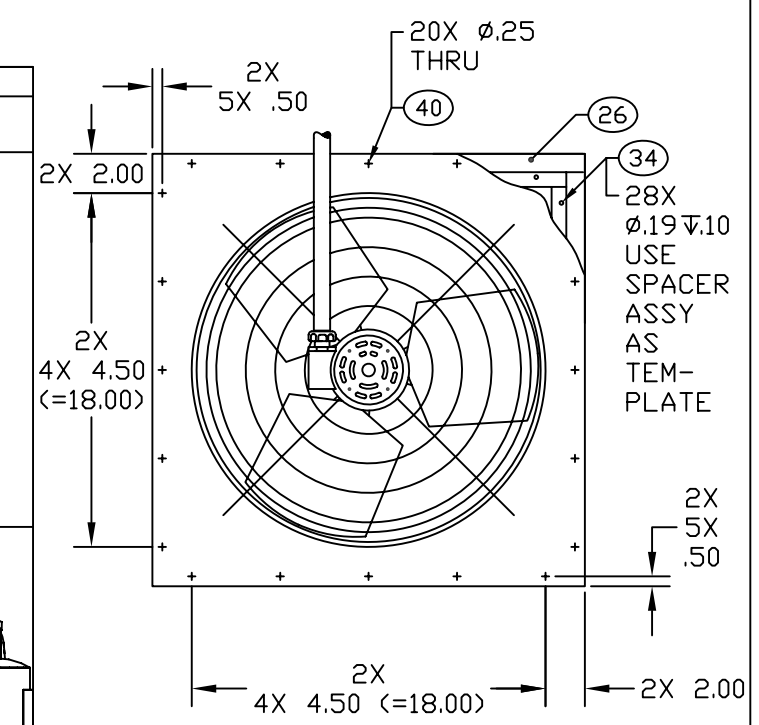

2X VIEW D
SCALE 1/5

ENGINEER	DATE	DRAWN BY	DATE	SIZE	CAGE CODE	DWG NO	REV
J. SNIDER	92-02-14	TN	97-02-27	D	91145	MFWL040101	G
NEXT ASSEMBLY		CHECKER					
FINAL		MAB	92-03-24	SCALE 1/10		SH 4	