REVISION HISTORY			
REV	DESCRIPTION	DATE	APPROVAL
D	REVISED AND PARTIALLY REDRAWN BY M. BEUSTER. (3) ITEM ADDED.	2006-12-08	R A VOTAW

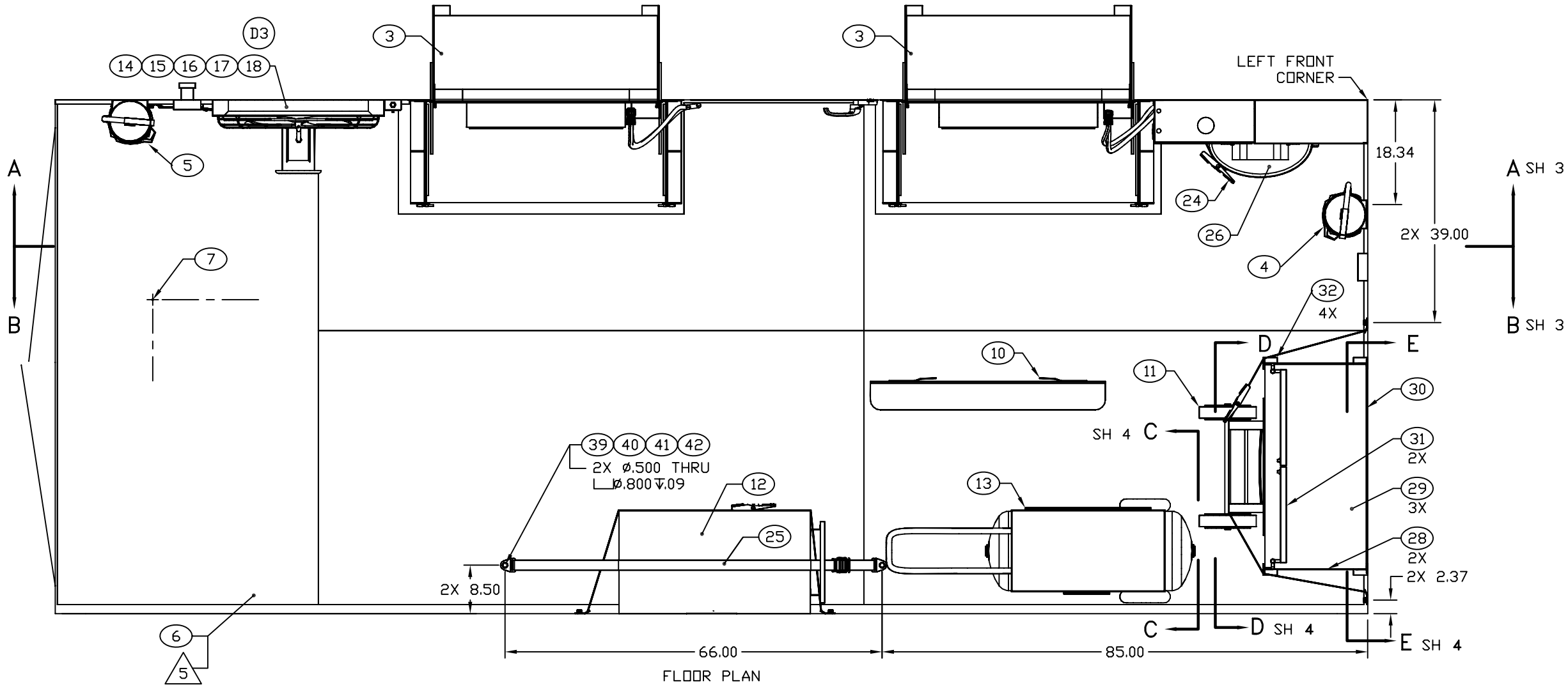

FLOOR PLAN

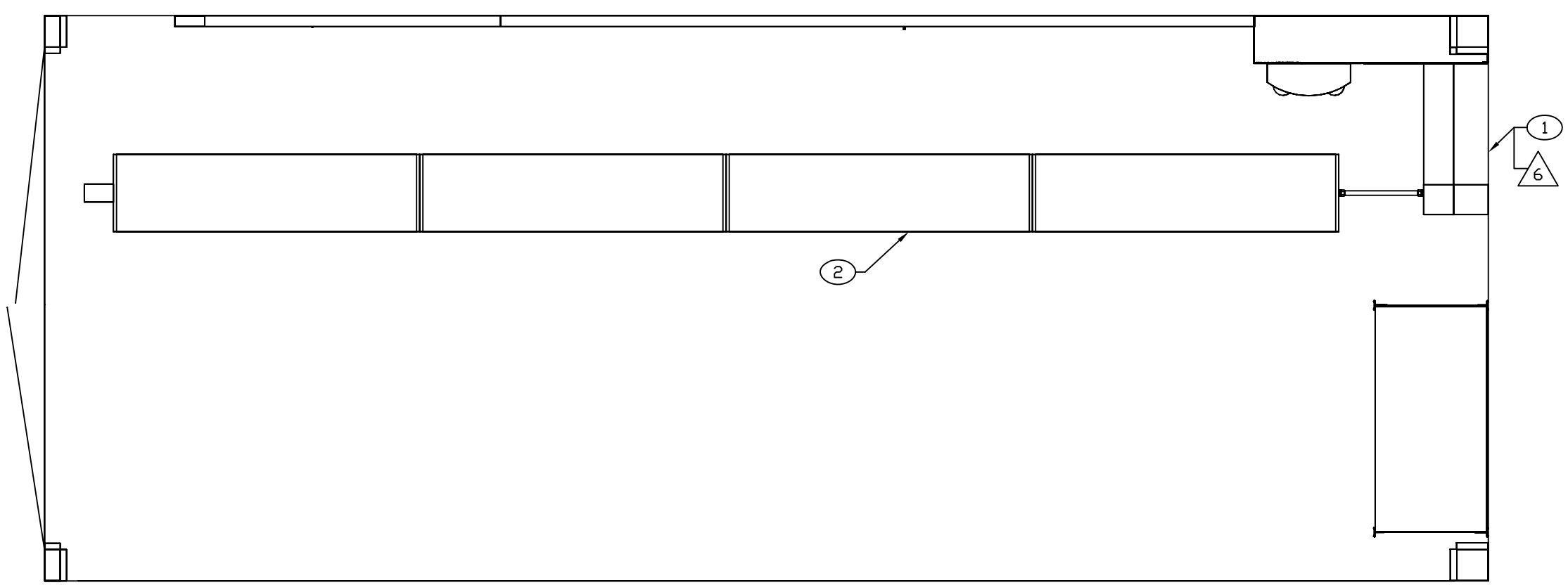

CEILING PLAN

ENGINEER	DATE	DRAWER	DATE	SIZE	CAGE CODE	DRAWING NUMBER	REV
E E MOON	99-12-01	MAB	00-10-12	D	91145	MFWC130101	D
NEXT ASSEMBLY		CHECKER		SCALE		SHEET	
FINAL		TN	99-11-27	1/11		2	

REVISION HISTORY			
REV	DESCRIPTION	DATE	APPROVAL
D	REVISED AND PARTIALLY REDRAWN BY M. BEUSTER. (3) ITEM ADDED.	2006-12-08	R A VOTAW

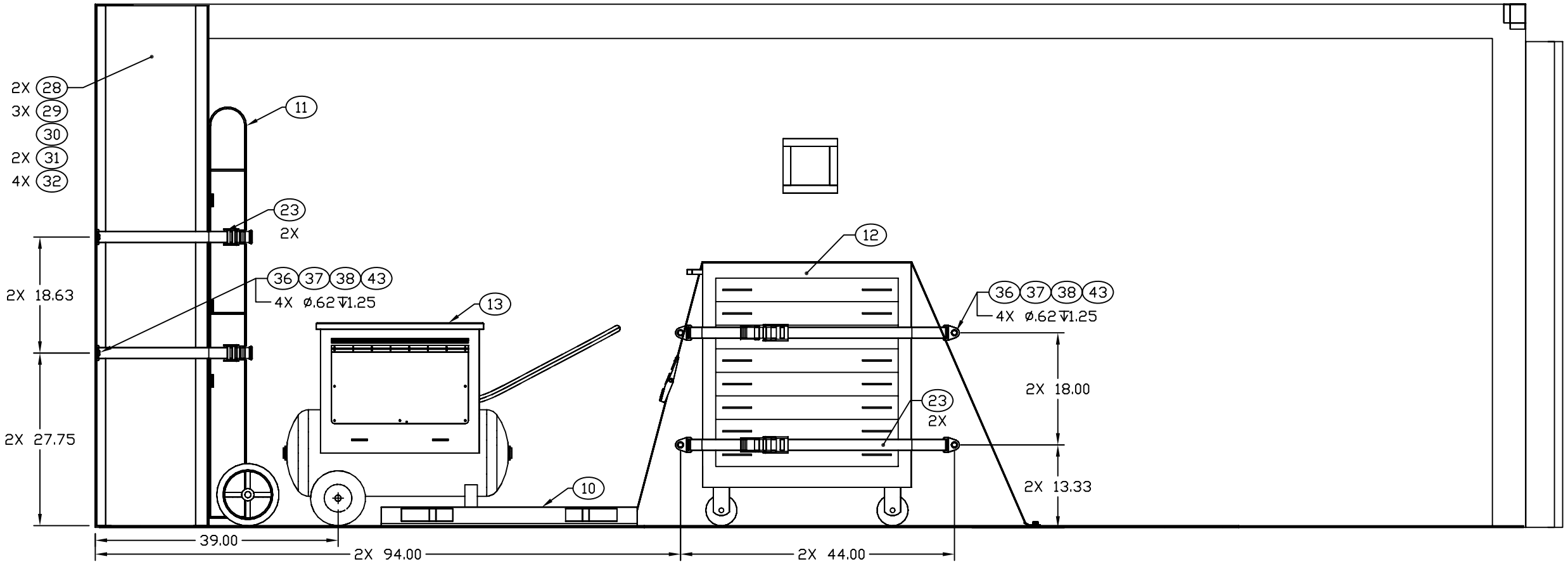

SECTION B–B SH 2
ROTATED 180°

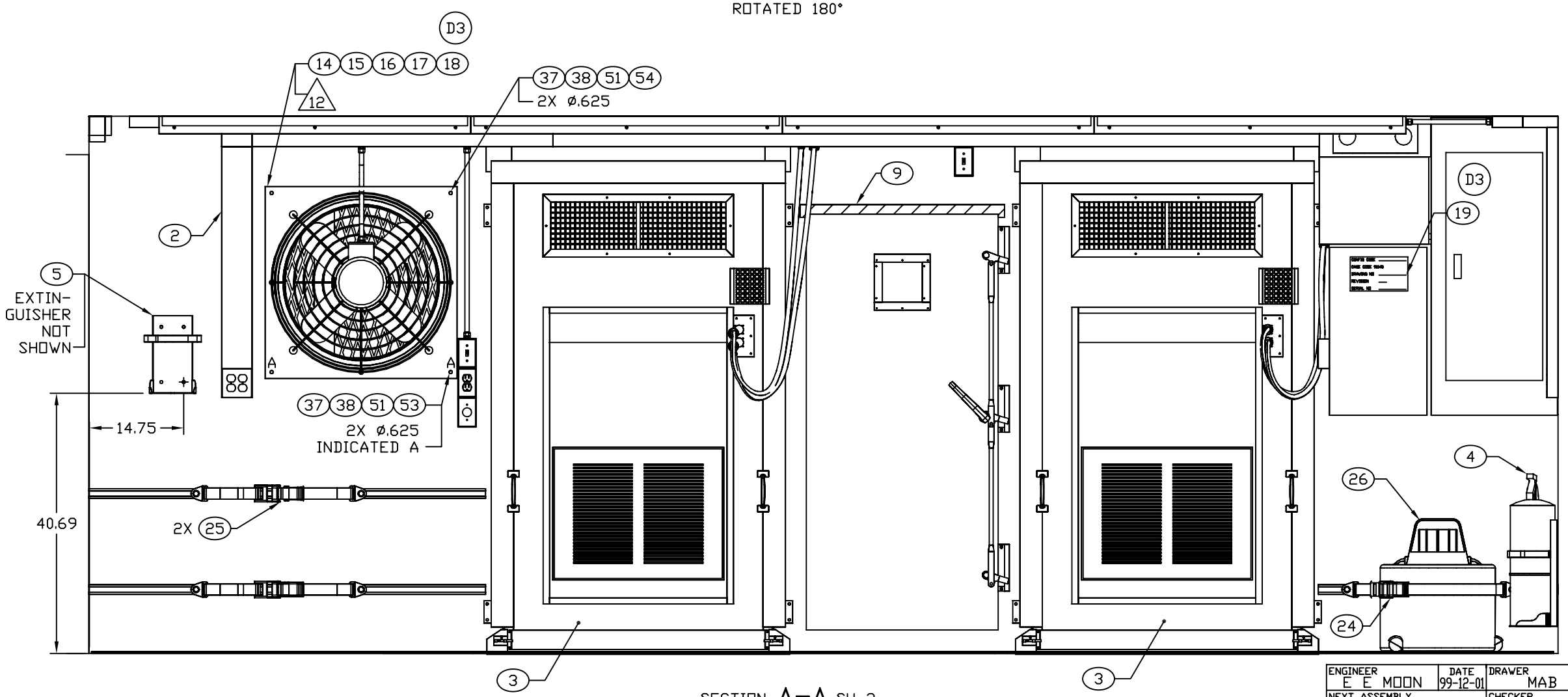

SECTION A–A SH 2

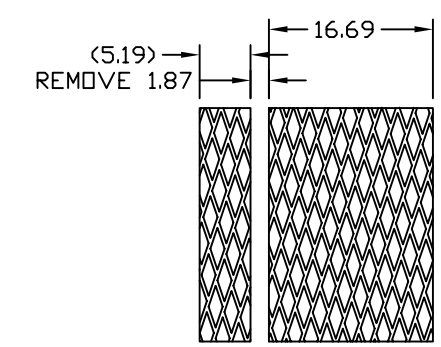

FIND NUMBER 14

ENGINEER	DATE	DRAWER	DATE	SIZE	CAGE CODE	DRAWING NUMBER	REV
E E MOON	99-12-01	MAB	00-10-12	D	91145	MFWC130101	D
NEXT ASSEMBLY		CHECKER		SCALE		SHEET	
FINAL		TN	99-11-27	1/10		3	