REVISION HISTORY			
REV	DESCRIPTION	DATE	APPROVAL
C	REVISED AND PARTIALLY REDRAWN BY M. BEUSTER. (3) SHELVES MOVED TO ACCOMMODATE LONGER BOOKCASE. (5) SECTION MOVED FROM SH 5.	2006-12-06	R A VOTAW

NOTES:

3.1 USE ITEM AS A TEMPLATE DURING INSTALLATION. INCLUDE ALL FASTENERS IN PACKOUT.

3.2 CUT TO FIT AT TIME OF INSTALLATION.

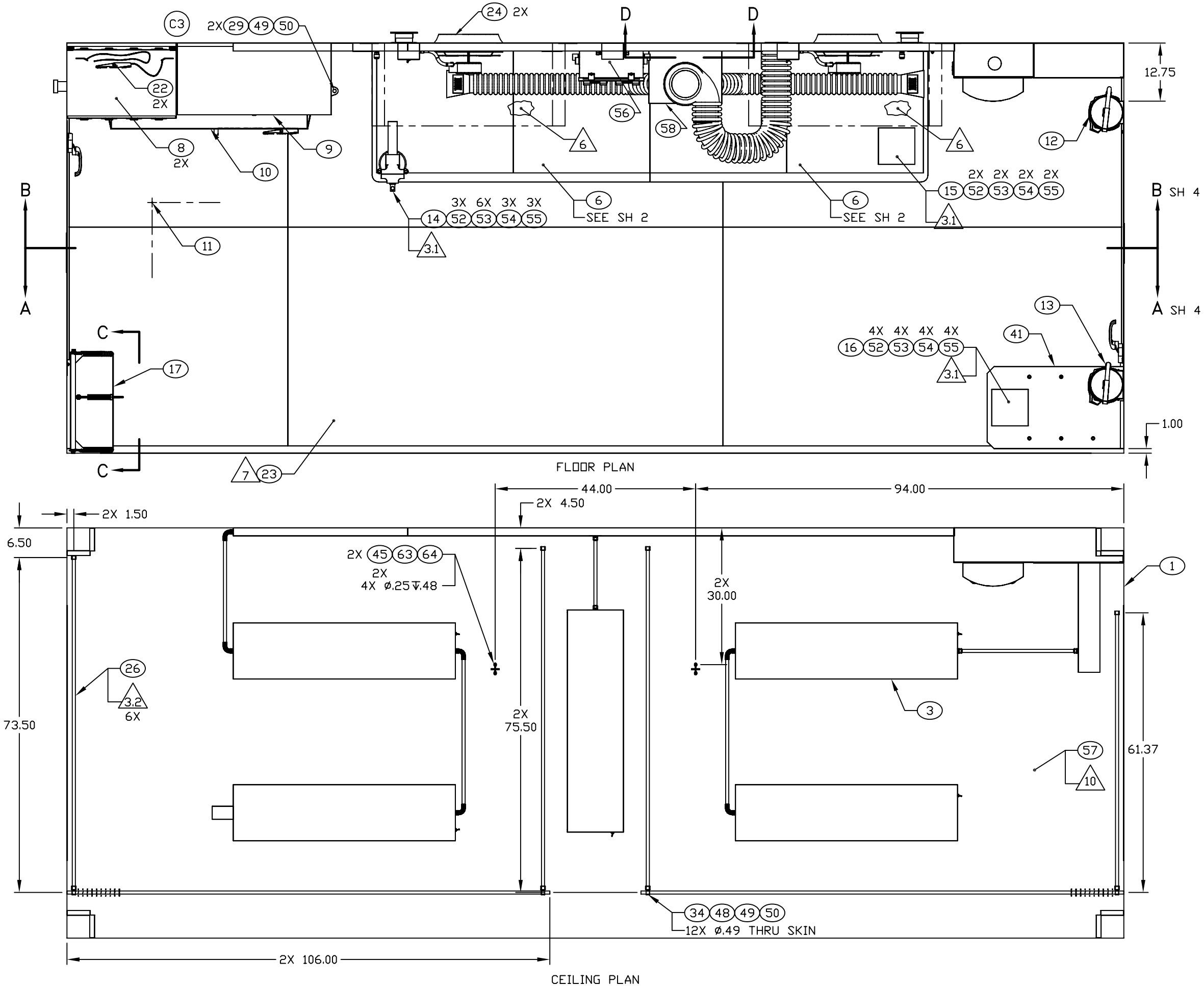

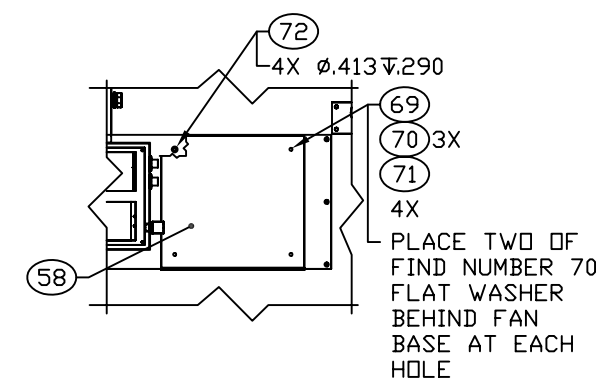

SECTION D–D
(EXHAUST FAN INSTALLATION)

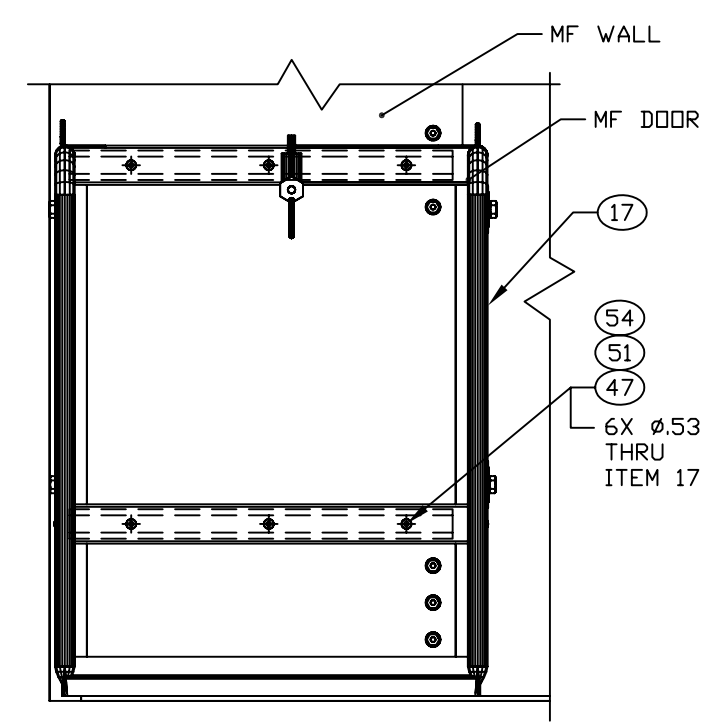

C5 SECTION C–C
ROTATED 90° CW
SCALE 1/5

ENGINEER	DATE	DRAWER	DATE	SIZE	CAGE CODE	DRAWING NUMBER	REV
E E MOON	99-11-24	MAB	00-09-06	D	91145	MF WC120101	C
NEXT ASSEMBLY		CHECKER		SCALE			SHEET
FINAL		TN	99-11-24	1/11			3

REVISION HISTORY			
REV	DESCRIPTION	DATE	APPROVAL
C	REVISED AND PARTIALLY REDRAWN BY M. BEUSTER. (2) ITEM ADDED. (3) SHELVES MOVED TO ACCOMMODATE LONGER BOOKCASE.	2006-12-06	R A VOTAW

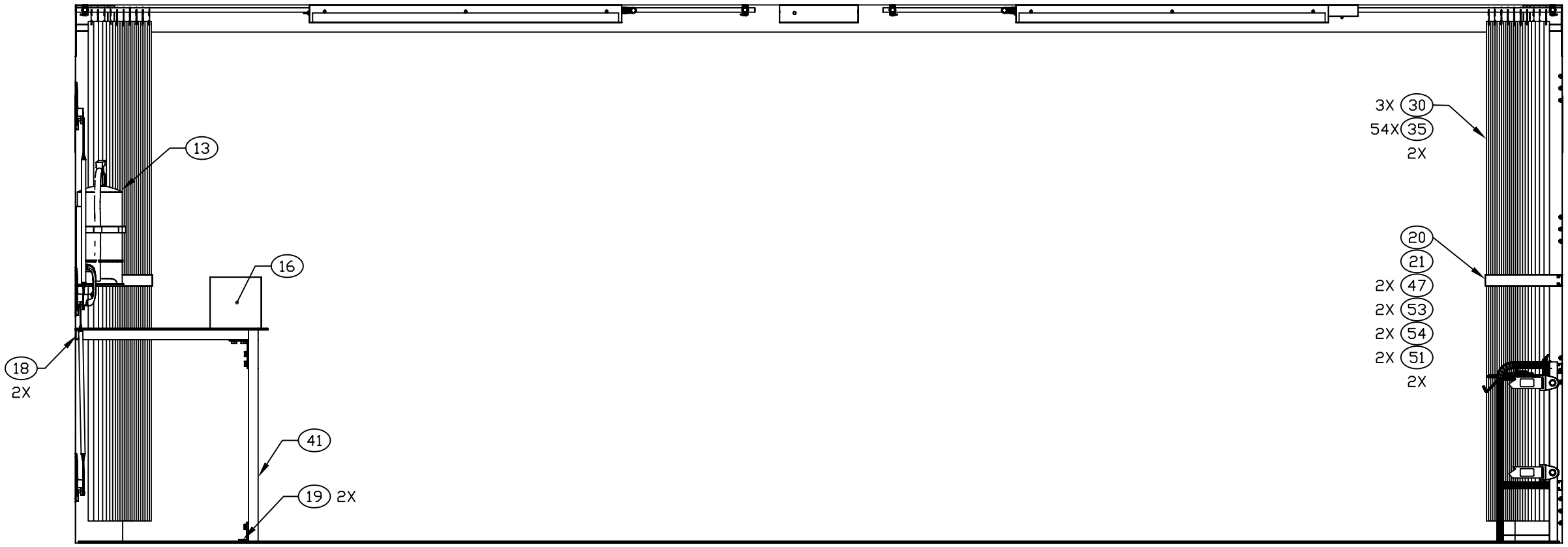

SECTION A–A SH 3
ROTATED 180°

NOTES:

4.1 SECURE FAN TO WALL WITH RIVETS FROM OUTSIDE THROUGH ENCLOSURE, WALL SKIN, AND FAN MOUNTING PLATE.
BEFORE INSTALLING RIVETS FROM OUTSIDE, SECURE THE FAN TO THE WALL FROM INSIDE USING FOUR RIVETS.

4.2 LABEL BOTH INTAKE NOZZLES, "PLACE NOZZLE EIGHT TO TEN INCHES FROM ARC OR TORCH."
USE PORTABLE LABELING MACHINE WITH THE FOLLOWING SETUP:
COLOR: WHITE ON RED
TYPE: 2.25 X 90.00
FONT SIZE: .25

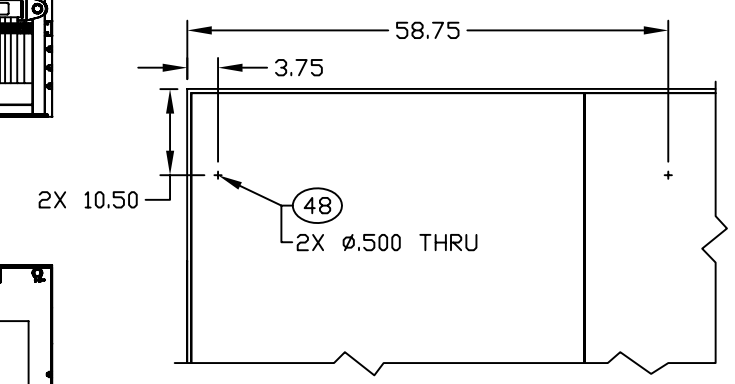

SECTION E–E
SCALE 1/12
CABINET AND STRAP ASSY NOT SHOWN

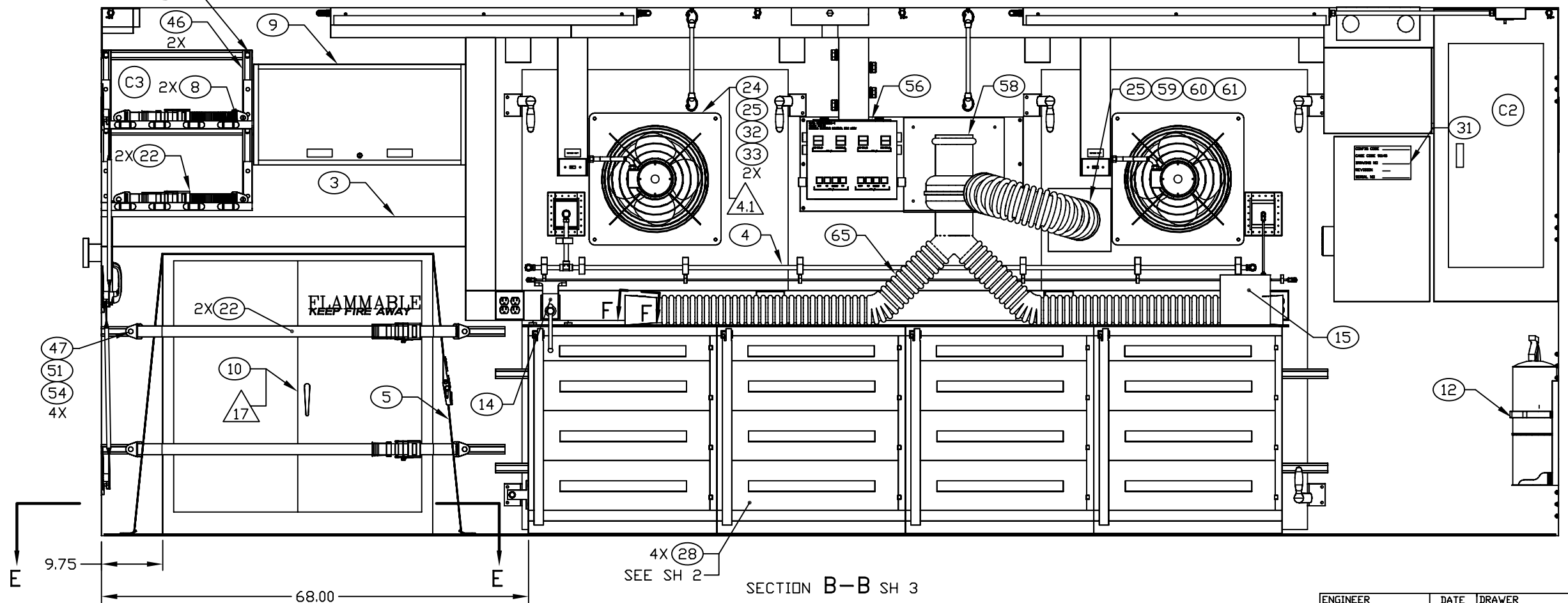

SECTION B–B SH 3

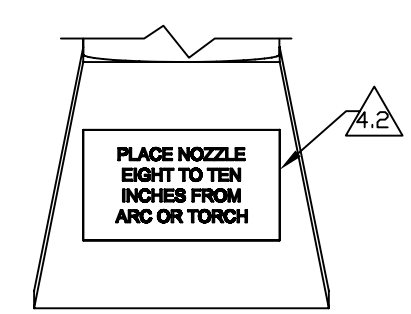

2X VIEW F–F
ROTATED 90° CCW
SCALE 1/2

ENGINEER	DATE	DRAWER	DATE	SIZE	CAGE CODE	DRAWING NUMBER	REV
E E MOON	99-11-24	MAB	00-09-06	D	91145	MFWC120101	C
NEXT ASSEMBLY FINAL		CHECKER TN	99-11-24	SCALE 1/10		SHEET 4	