REVISION HISTORY			
REV	DESCRIPTION	DATE	APPROVAL
F	REVISED AND PARTIALLY REDRAWN BY T H NGUYEN. CEILING LIGHT FIXTURES REDRAWN. (1) ITEM ADDED.	06-03-15	R VOTAW

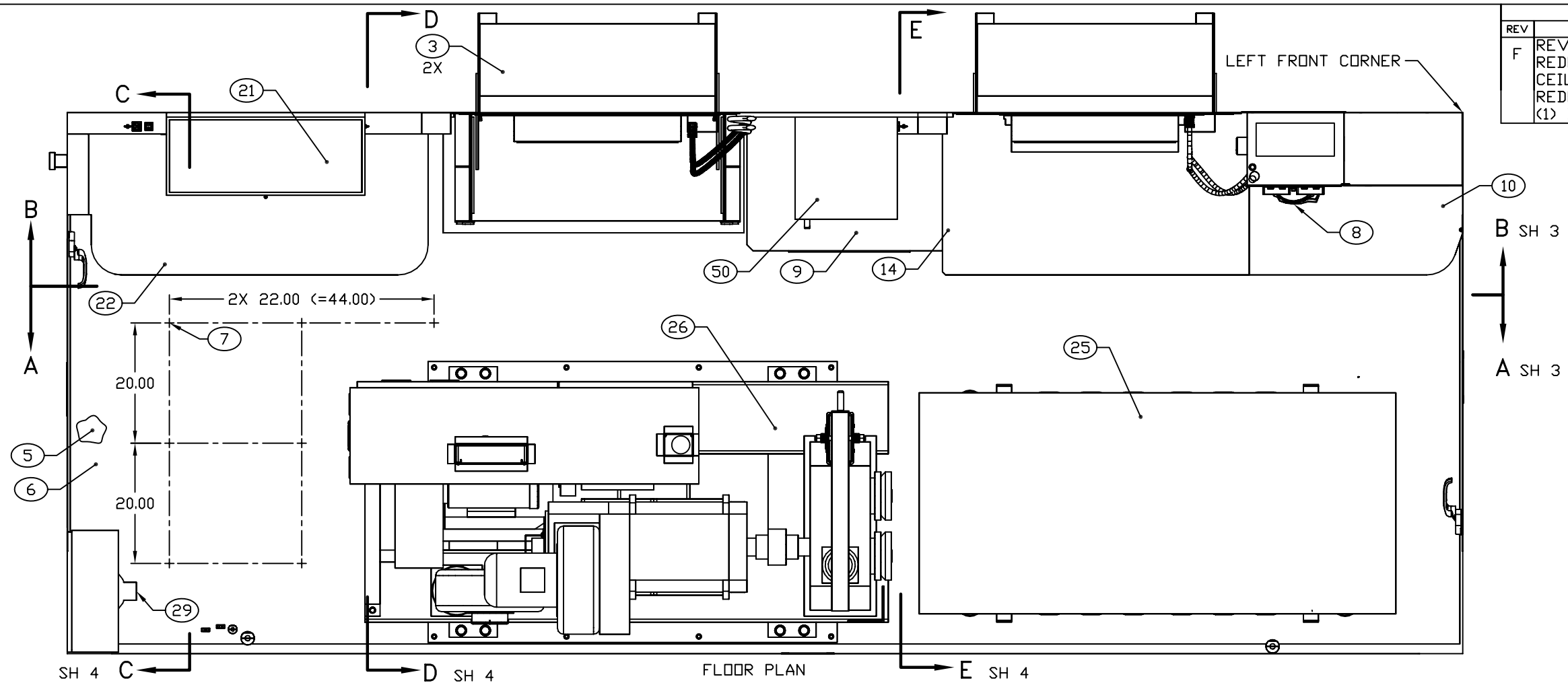

FLOOR PLAN

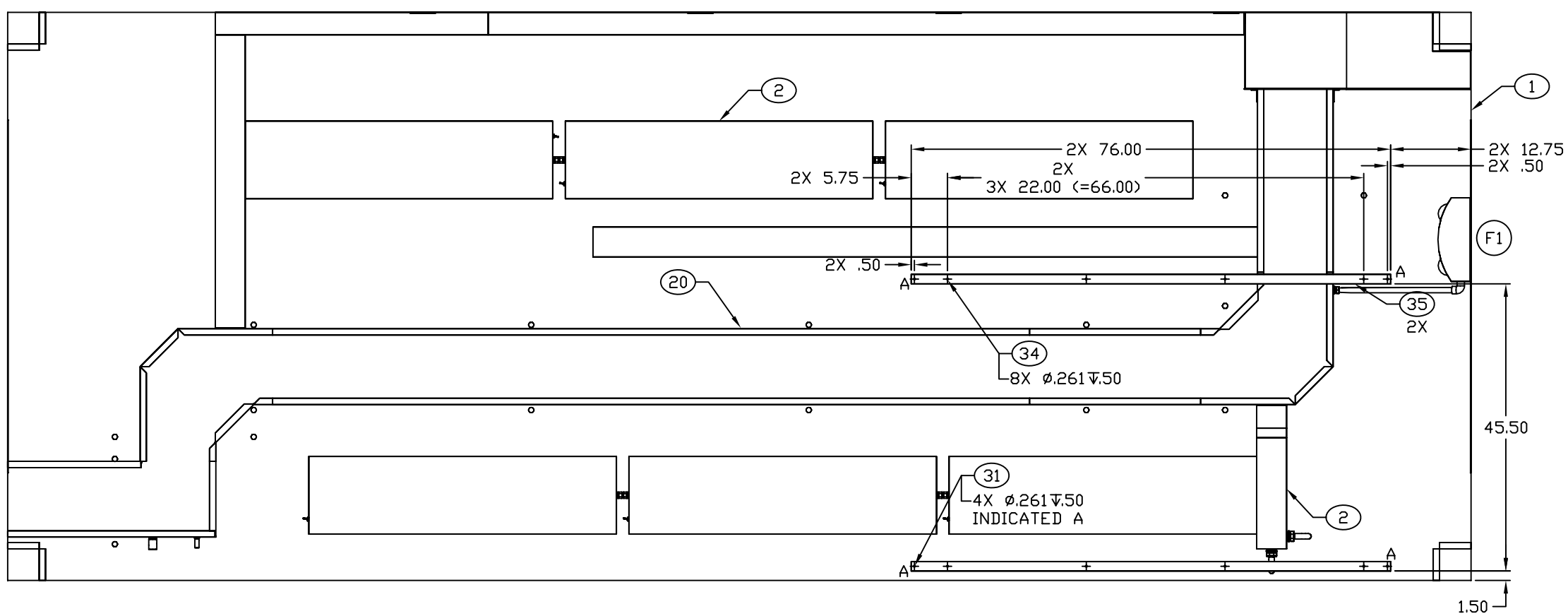

CEILING PLAN

ENGINEER		DRAWER	DATE	SIZE	CAGE CODE	DRAWING NUMBER	REV
T NGUYEN	01-01-17	TN	02-08-22	D	91145	MFVD070101	F
NEXT ASSEMBLY		CHECKER		SCALE		SHEET	
FINAL		P VICENCIO	01-01-17	1/11		2	

REVISION HISTORY			
REV	DESCRIPTION	DATE	APPROVAL
F	REVISED AND PARTIALLY REDRAWN BY T H NGUYEN. CEILING LIGHT FIXTURES REDRAWN. (1) ITEM ADDED.	06-03-15	R VOTAW

NOTES:

3.1 REPLACE FIND NO 7, B-921 CORNER CONNECTOR OF DRAWING NO MFBFNI133-3 FRAME ASSY WITH FIND NO 27, B-917 ANGLE CONNECTOR. REUSE EXISTING HARDWARE TO INSTALL CONNECTOR.

3.2 NOTCH RACEWAY TO FIT AT TIME OF INSTALLATION.

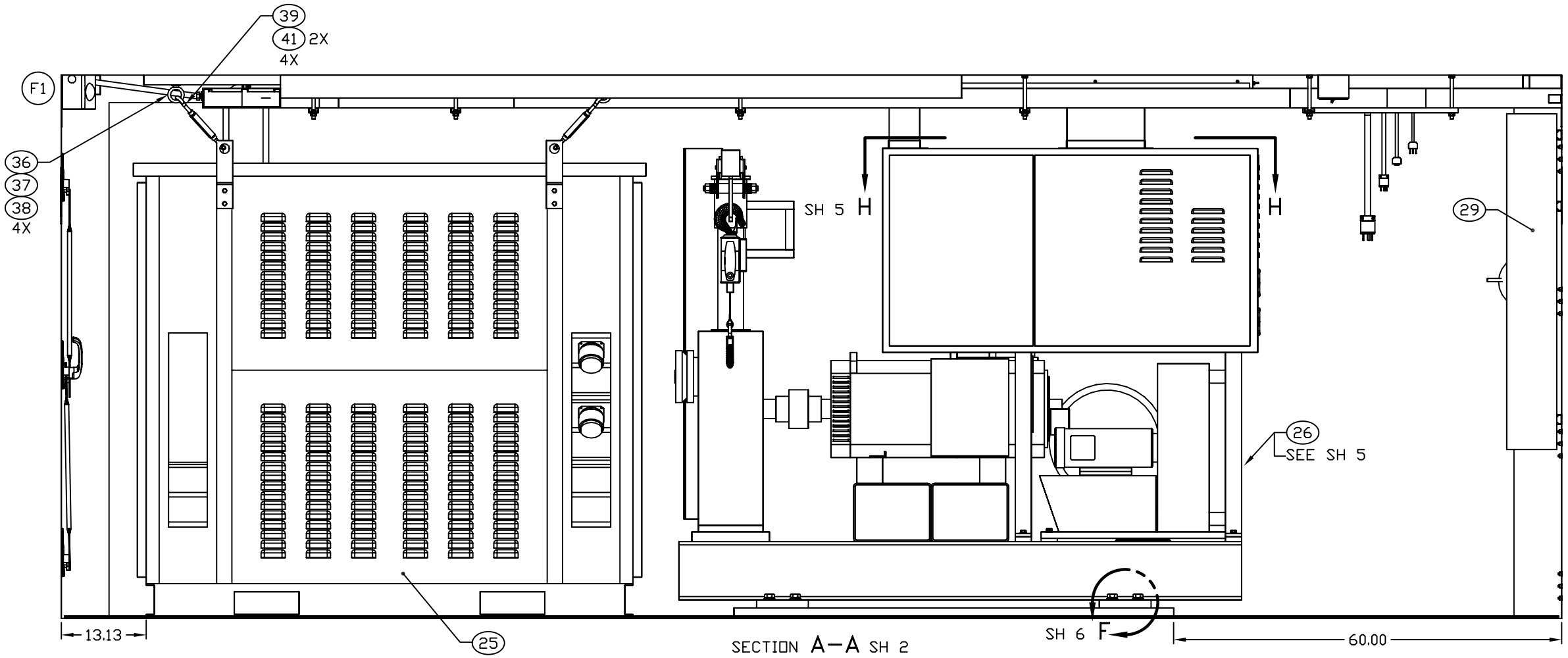

SECTION A–A SH 2
ROTATED 180°

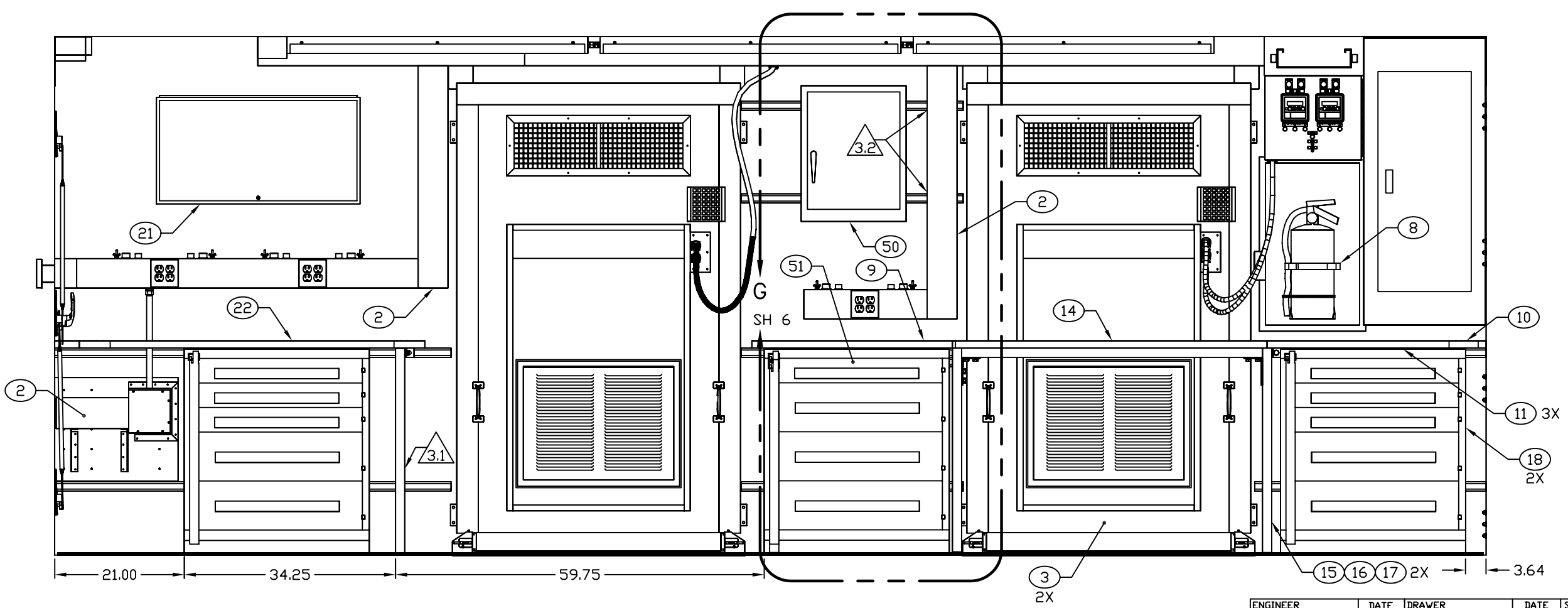

SECTION B–B SH 2

ENGINEER	DATE	DRAWER	DATE	SIZE	CAGE CODE	DRAWING NUMBER	REV
T NGUYEN	01-01-17	TN	02-08-08	D	91145	MFVD070101	F
NEXT ASSEMBLY		CHECKER		SCALE		SHEET	
FINAL		P VICENCIO	01-01-17	1/10		3	