REVISION HISTORY			
REV	DESCRIPTION	DATE	APPROVAL
E	REVISED AND PARTIALLY REDRAWN BY T H NGUYEN. (3) FIND NO 21 REDRAWN AND RELOCATED.	05-11-23	R VOTAW

NOTE:

2.1 CUT RACEWAY TO FIT CHANNEL.

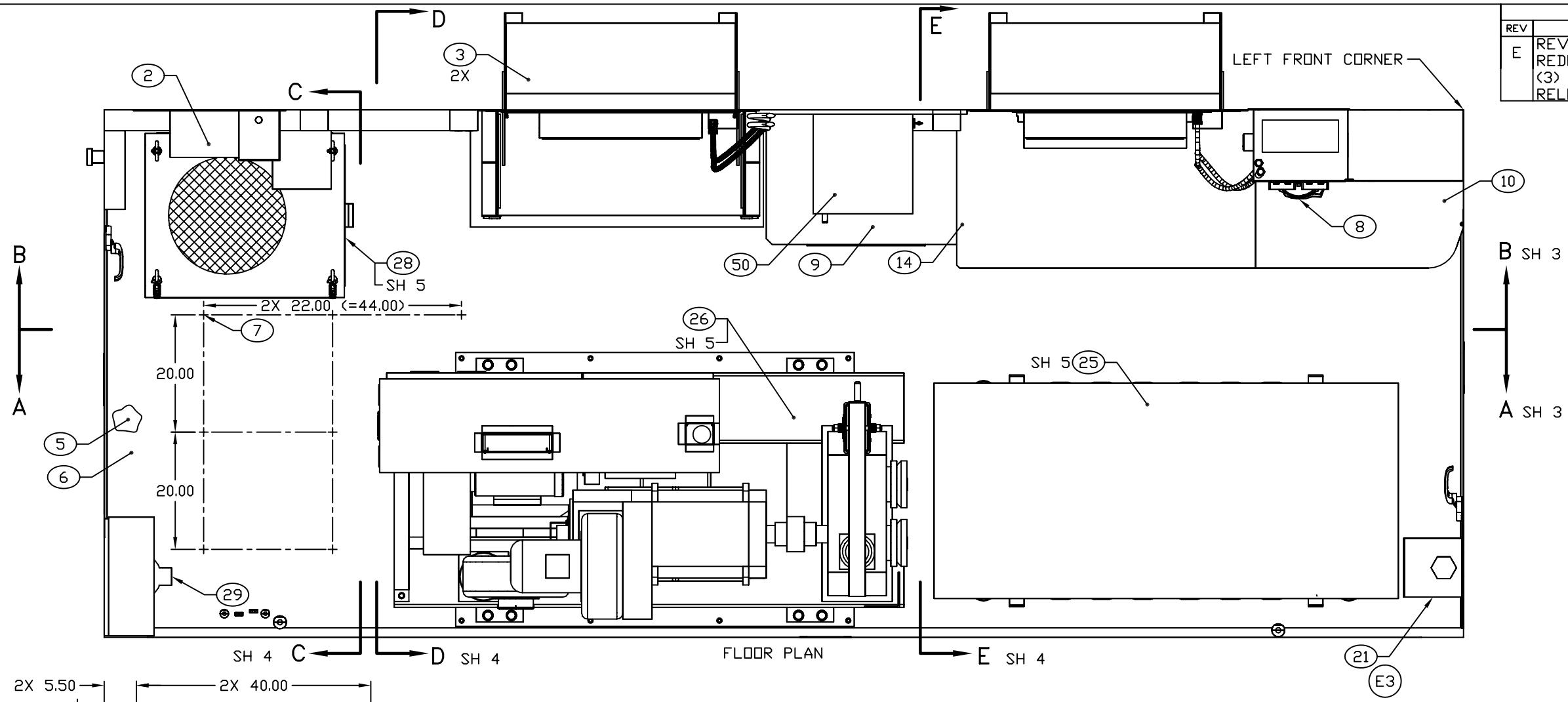

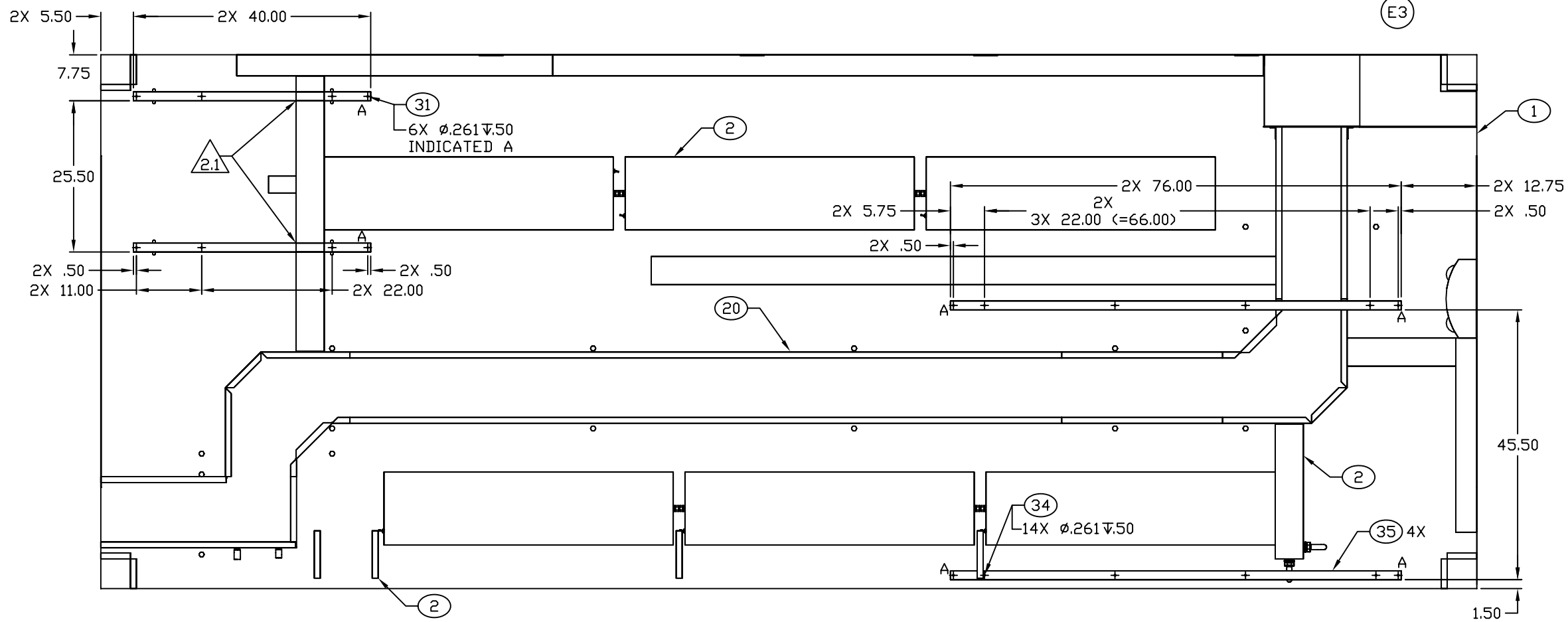

CEILING PLAN

ENGINEER	DATE	DRAWER	DATE	SIZE	CAGE CODE	DRAWING NUMBER	REV
T NGUYEN	00-12-13	TN	02-08-13	D	91145	MFVD050101	E
NEXT ASSEMBLY		CHECKER		SCALE		SHEET	
FINAL		MAB	00-12-13	1/11		2	

REVISION HISTORY			
REV	DESCRIPTION	DATE	APPROVAL
E	REVISED AND PARTIALLY REDRAWN BY T H NGUYEN. (3) FIND NO 21 REDRAWN AND RELOCATED.	05-11-23	R VOTAW

NOTE:

3.1 NOTCH RACEWAY TO FIT AT TIME OF INSTALLATION.

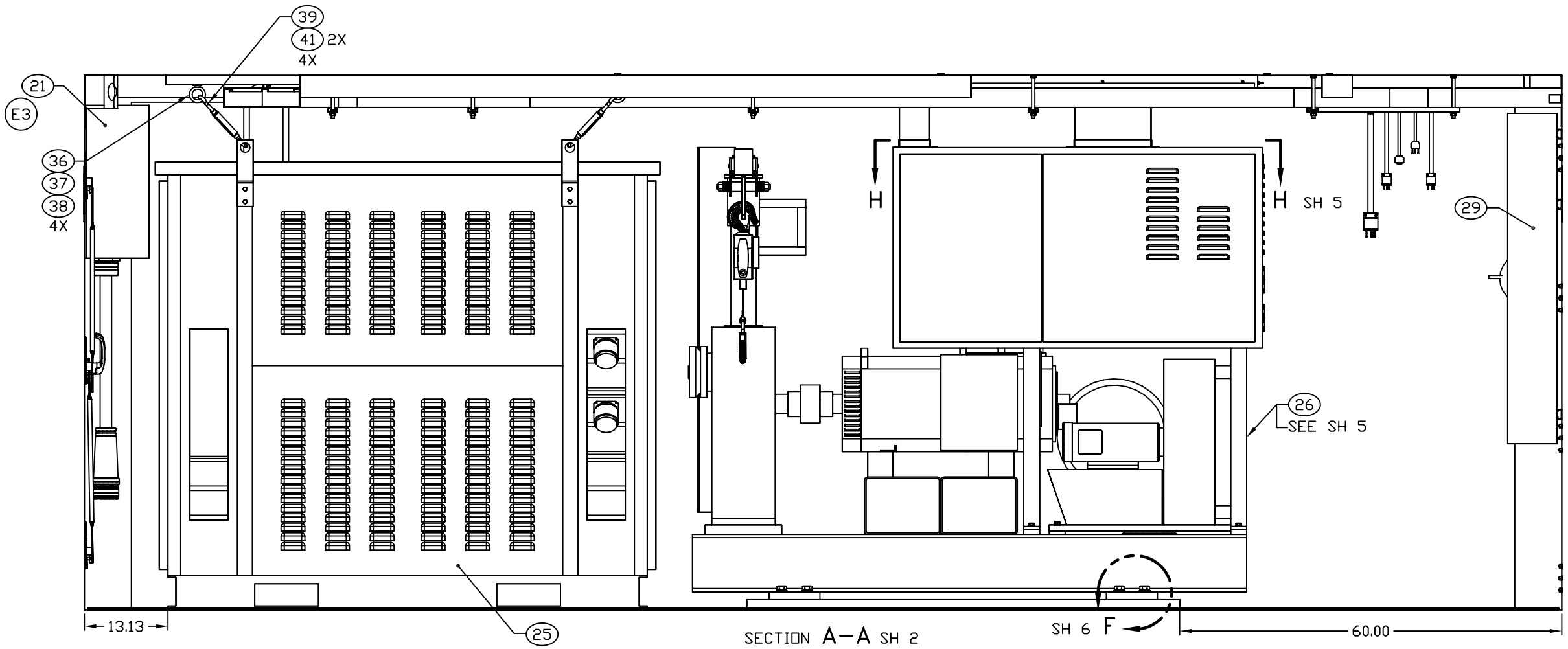

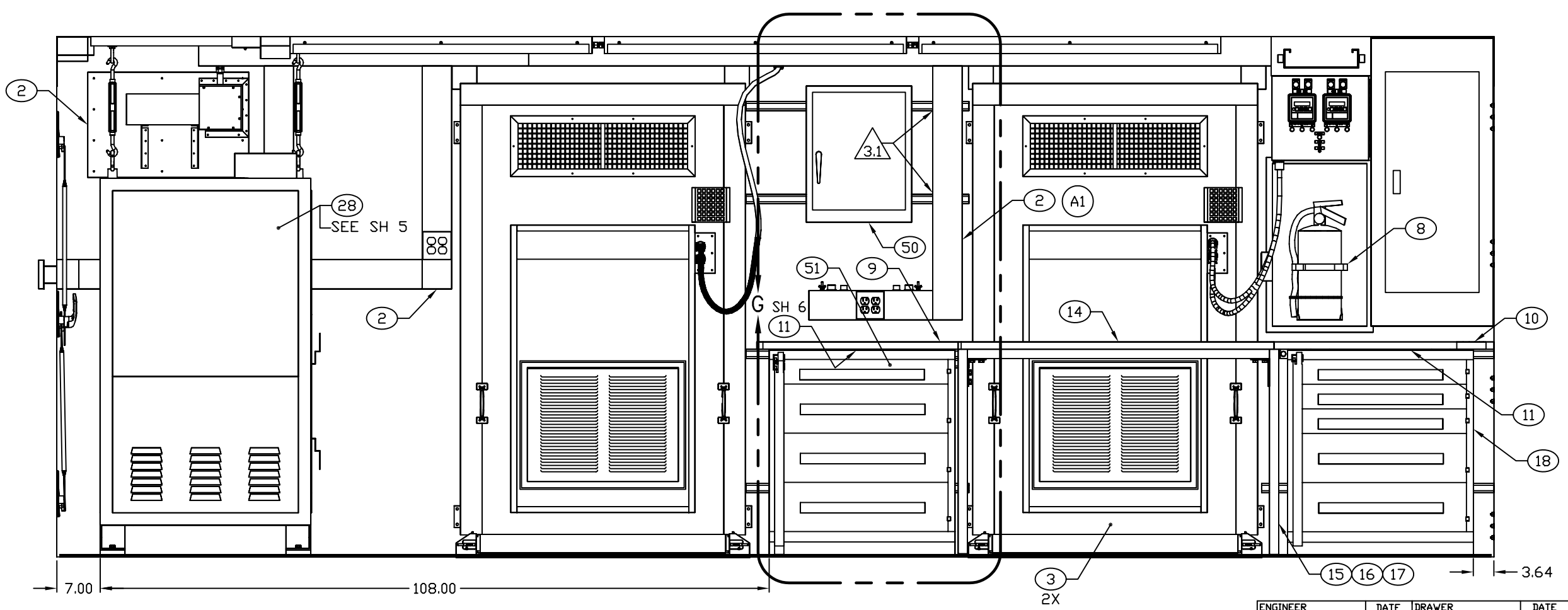

ENGINEER	DATE	DRAWER	DATE	SIZE	CAGE CODE	DRAWING NUMBER	REV
T NGUYEN	00-12-13	TN	02-08-13	D	91145	MFVD050101	E
NEXT ASSEMBLY		CHECKER		SCALE		SHEET	
FINAL		MAB	00-12-13	1/10		3	