| REVISIONS | | | |
|---|---|---|---|
| REV | DESCRIPTION | DATE | APPROVAL |
| A | REDRAWN WITH CHANGES. | | |

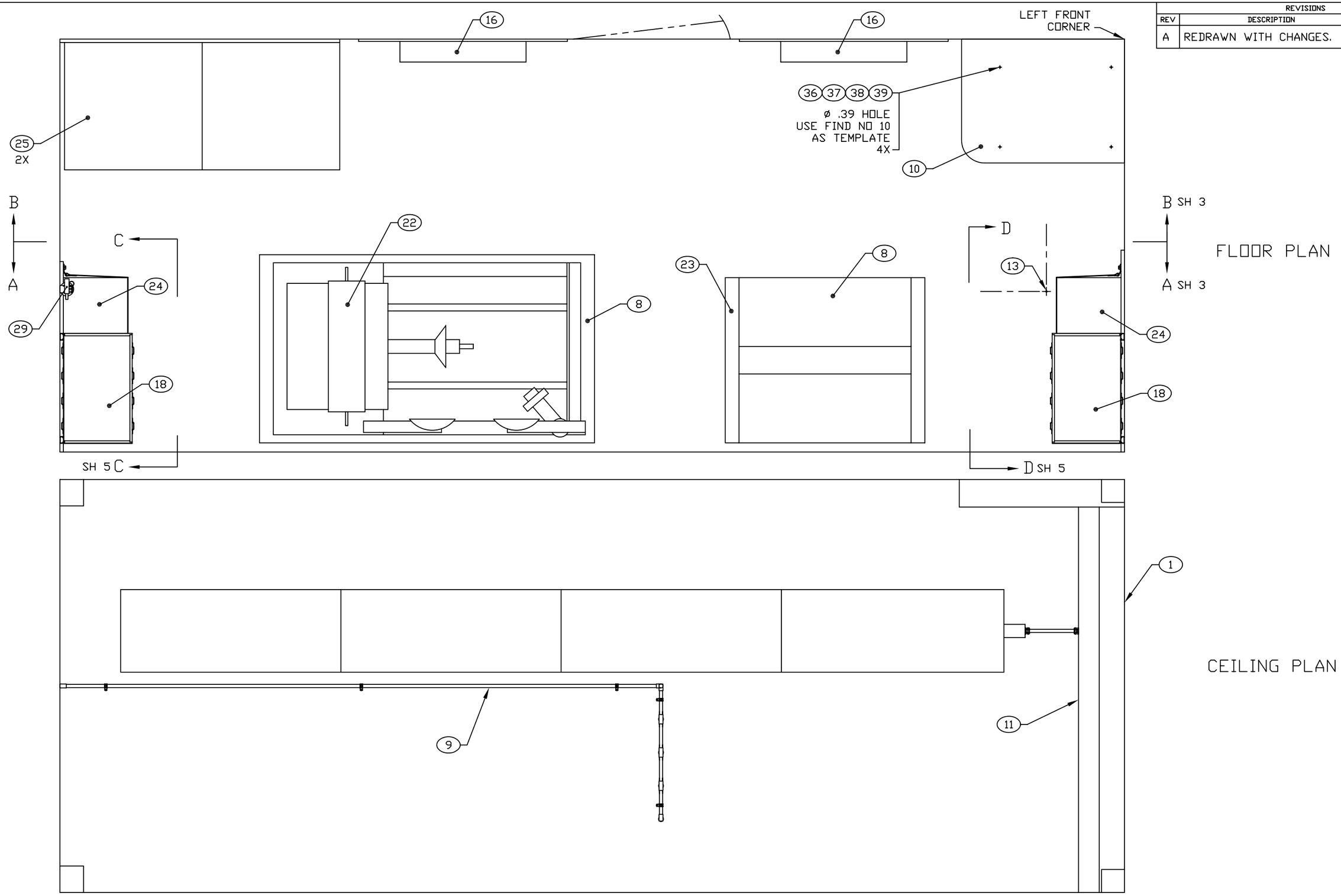


| ENGINEER | DATE | DRAWN BY | DATE | SIZE | CAGE CODE | DWG NO | REV |
|---|---|---|---|---|---|---|---|
| BEUSTER | 88-04-26 | TN | 94-09-09 | D | 91145 | MFTW060101 | A |
| NEXT ASSEMBLY FINAL | | CHECKER RJ | 88-06-02 | SCALE 1/10 | | SH 2 | |

TW061012.DWG

| REVISIONS | | | |
|---|---|---|---|
| REV | DESCRIPTION | DATE | APPROVAL |
| A | REDRAWN WITH CHANGES. | | |

NOTE:

3.1 DIMENSIONS AND FIND NOS APPLIED TO EACH FIND NO 25.

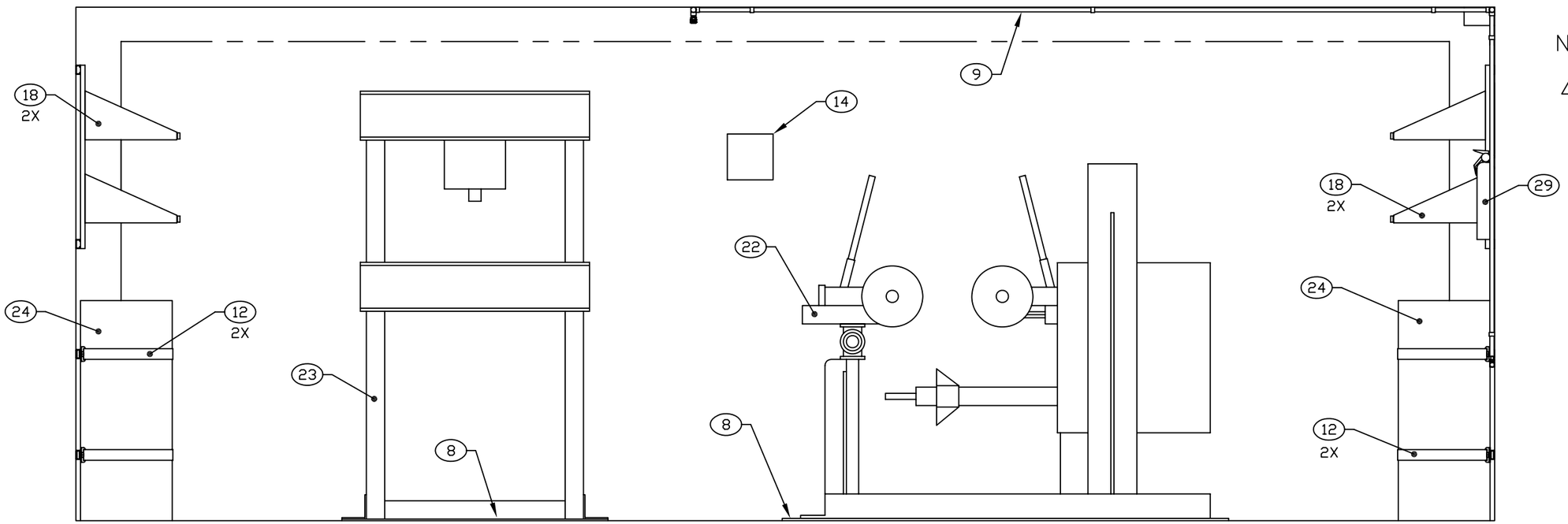


SECTION A-A SH 2

ROTATED 180°

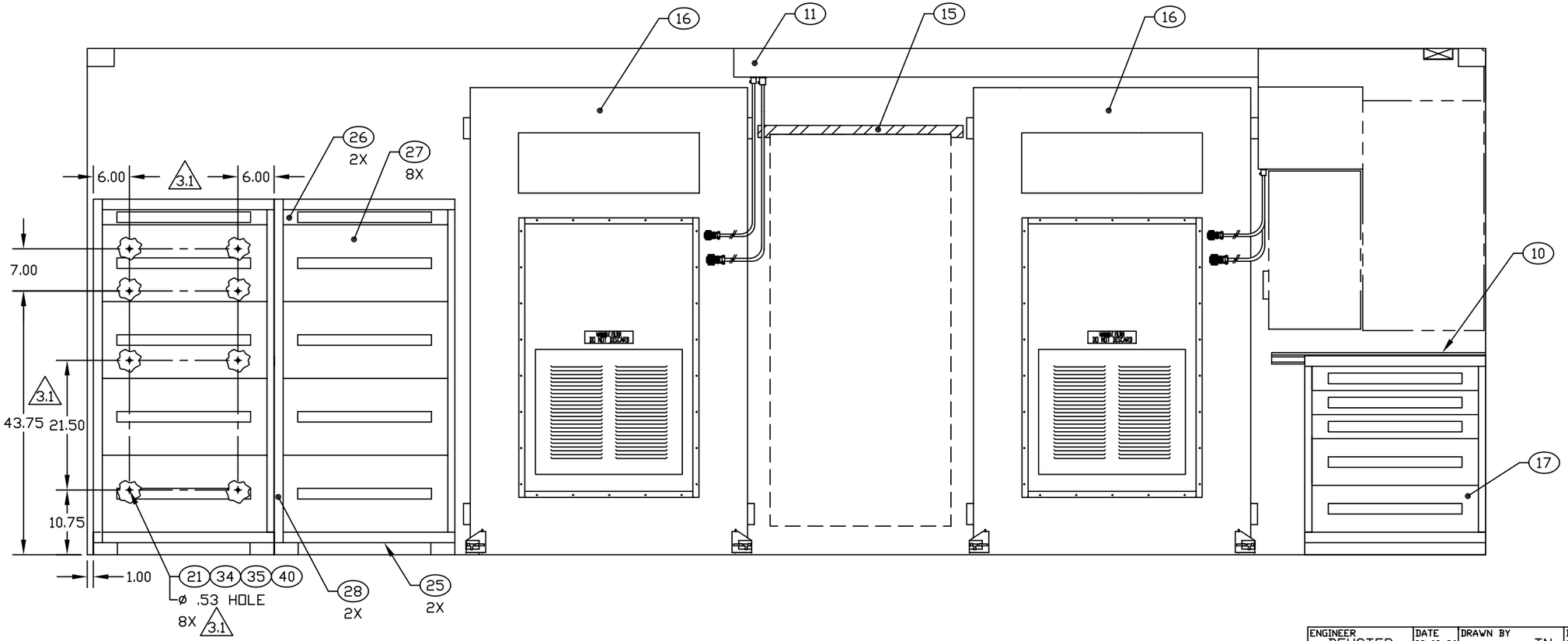


SECTION B-B SH 2

| ENGINEER | DATE | DRAWN BY | DATE | SIZE | CAGE CODE | DWG NO | REV |
|---|---|---|---|---|---|---|---|
| BEUSTER | 88-09-26 | TN | 94-09-09 | D | 91145 | MFTW060101 | A |
| NEXT ASSEMBLY | | CHECKER | | | | | |
| FINAL | | R. JONES | 88-06-02 | SCALE 1/10 | | SH 3 | |

TW061013.DWG