REVISIONS			
REV	DESCRIPTION	DATE	APPROVAL
A	REDRAWN WITH CHANGES.		

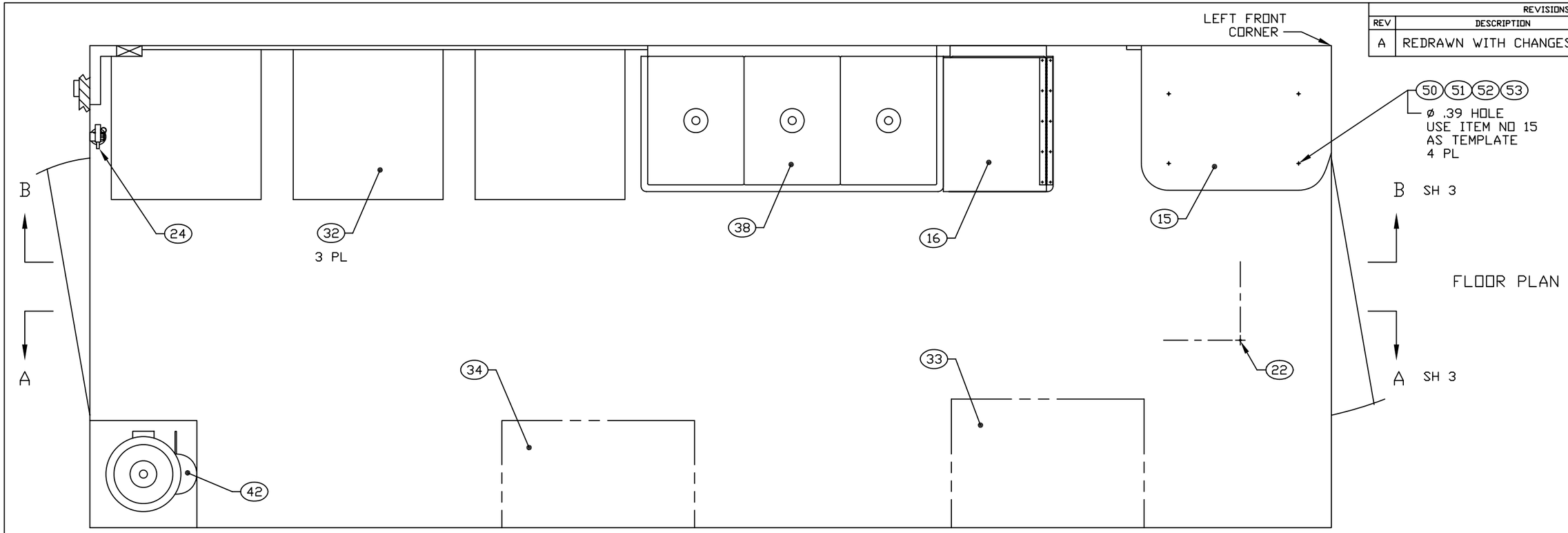

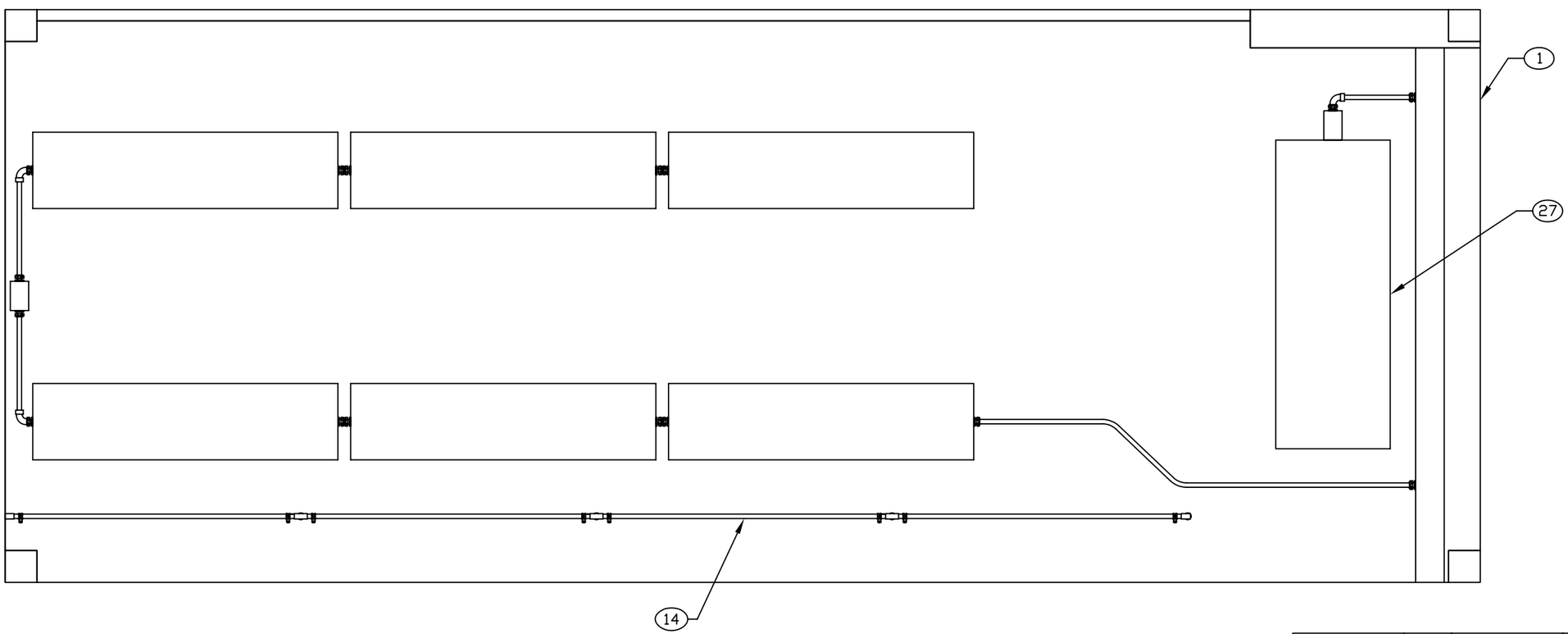

ENGINEER	DATE	DRAWN BY	DATE	SIZE	CAGE CODE	DWG NO	REV
BEUSTER	88-05-11	TN	94-09-01	D	91145	MFTW050101	A
NEXT ASSEMBLY		CHECKER		SCALE			SH
FINAL		R. JONES	88-10-11	1/10			2

TW051012.DWG

REVISIONS			
REV	DESCRIPTION	DATE	APPROVAL
A	REDRAWN WITH CHANGES.		

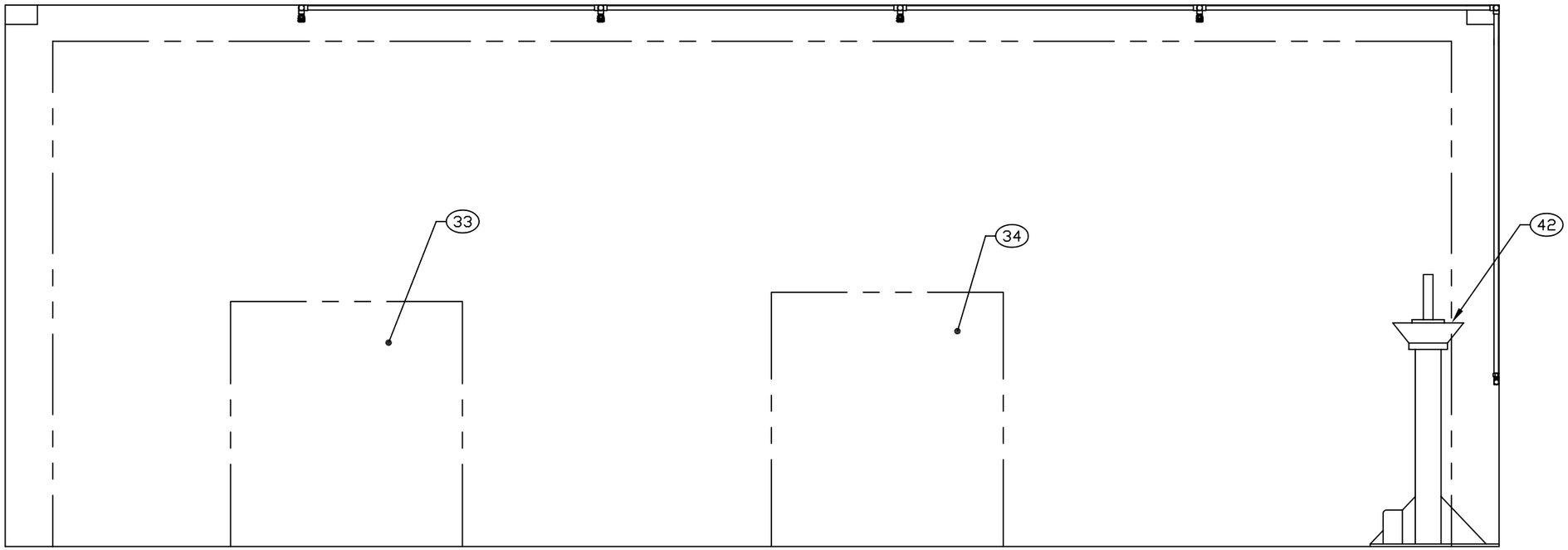

SECTION A-A SH 3

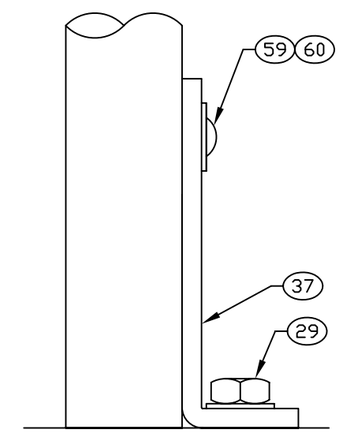

SECTION C-C 4 PL (FRONT LEGS)
SCALE 1/1

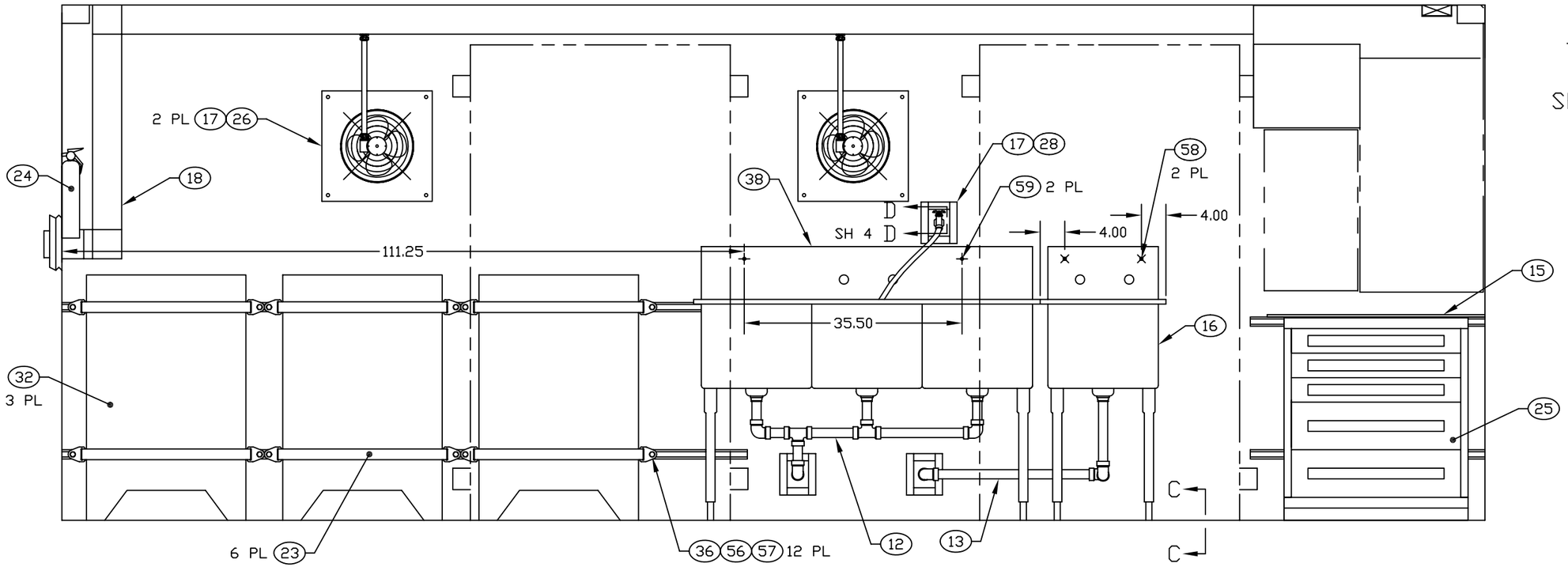

SECTION B-B SH 2

ENGINEER	DATE	DRAWN BY	DATE	SIZE	CAGE CODE	DWG NO	REV
BEUSTER	88-05-11	TN	94-08-31	D	91145	MFTW050101	A
NEXT ASSEMBLY		CHECKER		SCALE 1/10 AND AS NOTED		SH 3	
FINAL		R. JONES	88-10-11				

TW051013.DWG