REVISIONS			
REV	DESCRIPTION	DATE	APPROVAL
B	REVISED AND PARTIALLY REDRAWN BY T H NGUYEN. DRAWING FORMAT UPDATED. (2) ITEM ADDED.	06-09-25	R VOTAW

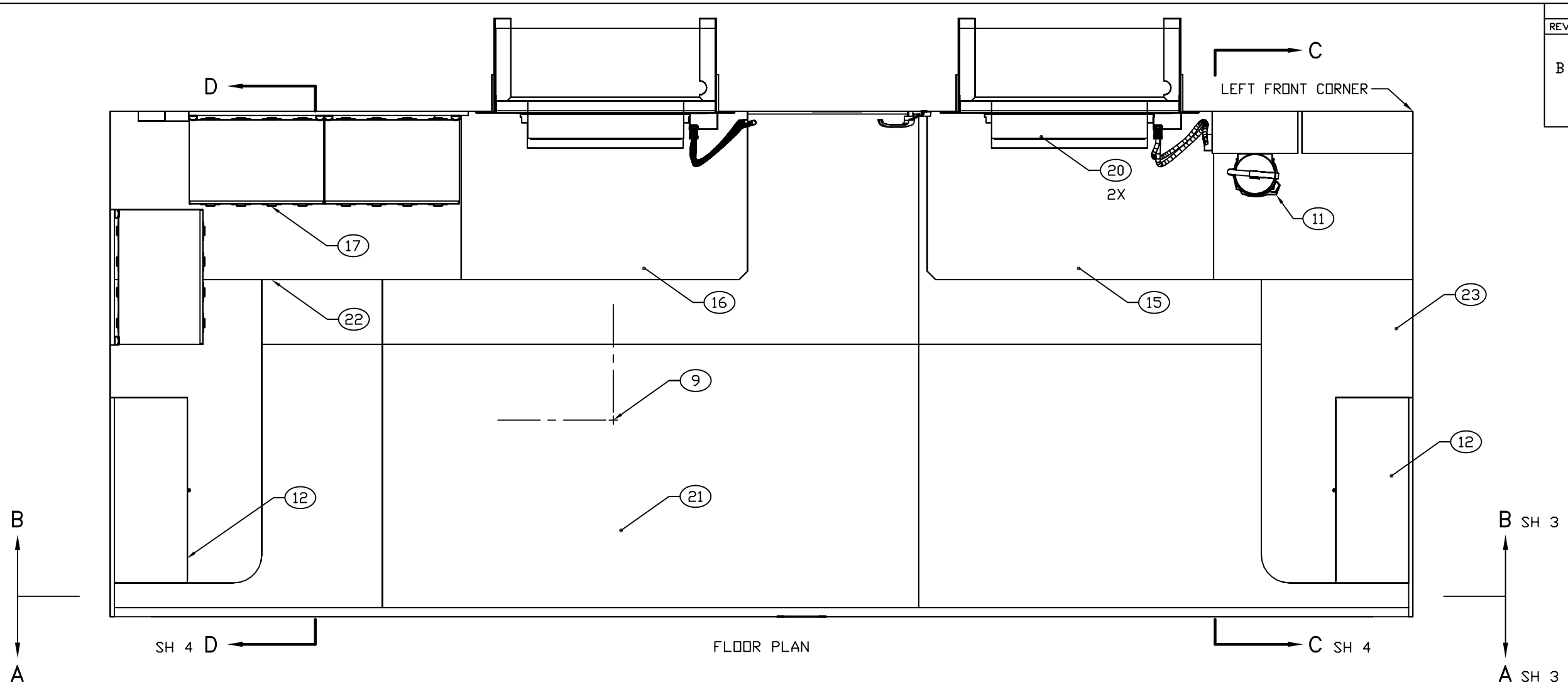

FLOOR PLAN

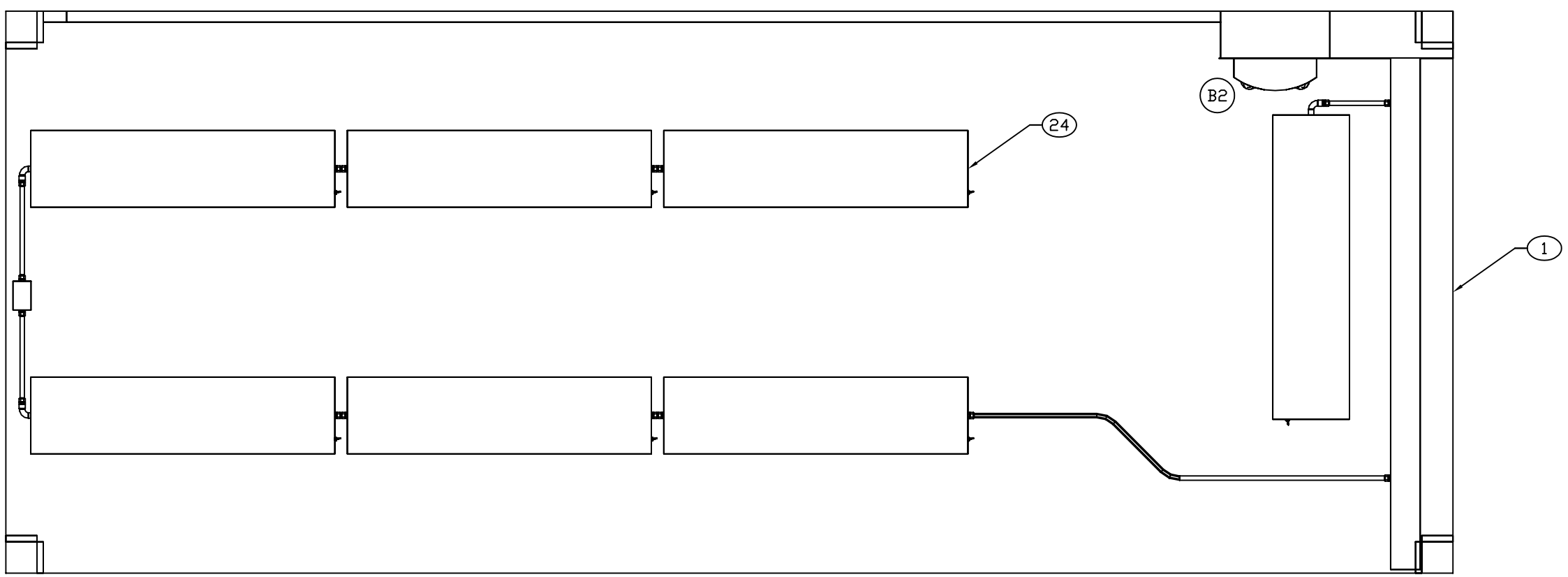

CEILING PLAN

ENGINEER	DATE	DRAWER	DATE	SIZE	CAGE CODE	DRAWING NUMBER	REV
J. ALLEN	89-01-13	MAB	95-10-11	D	91145	MFTT040101	B
NEXT ASSEMBLY		CHECKER		SCALE 1/11		SHEET 2	
FINAL		MAB	95-10-10				

REVISIONS			
REV	DESCRIPTION	DATE	APPROVAL
B	REVISED AND PARTIALLY REDRAWN BY T H NGUYEN. DRAWING FORMAT UPDATED. (2) ITEM ADDED.	06-09-25	R VOTAW

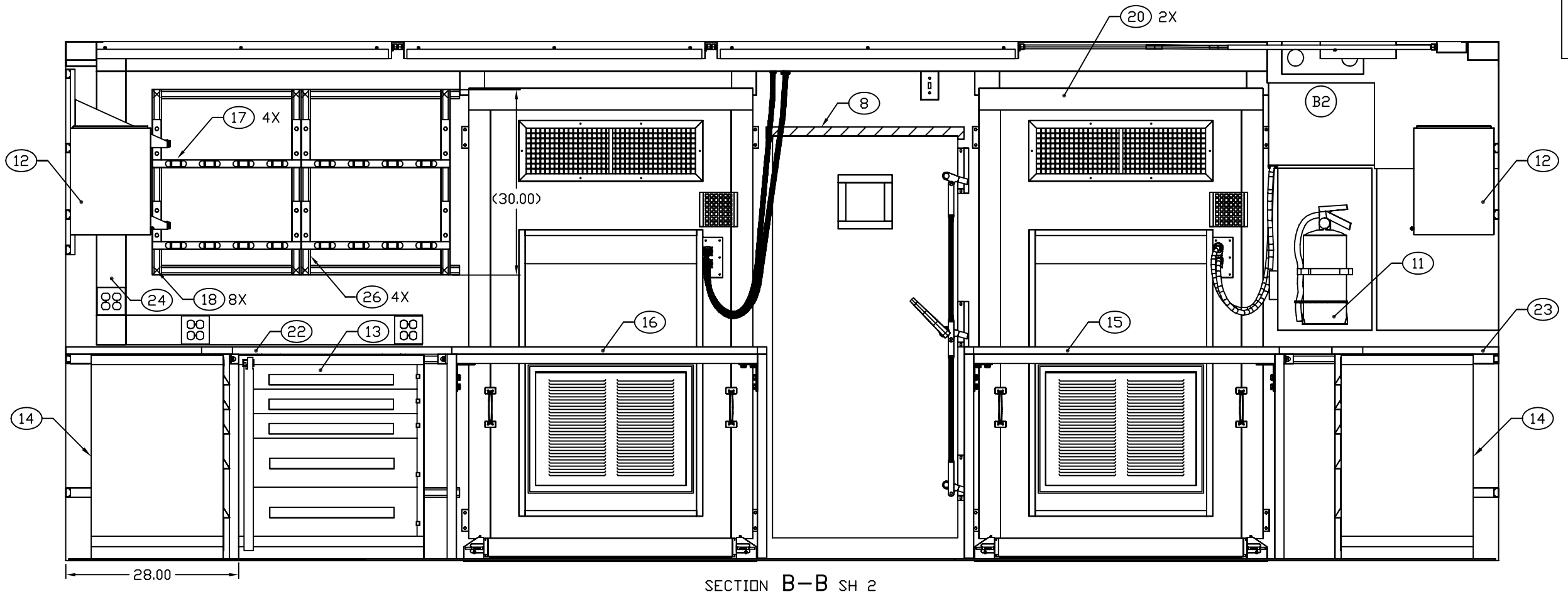

SECTION B–B SH 2

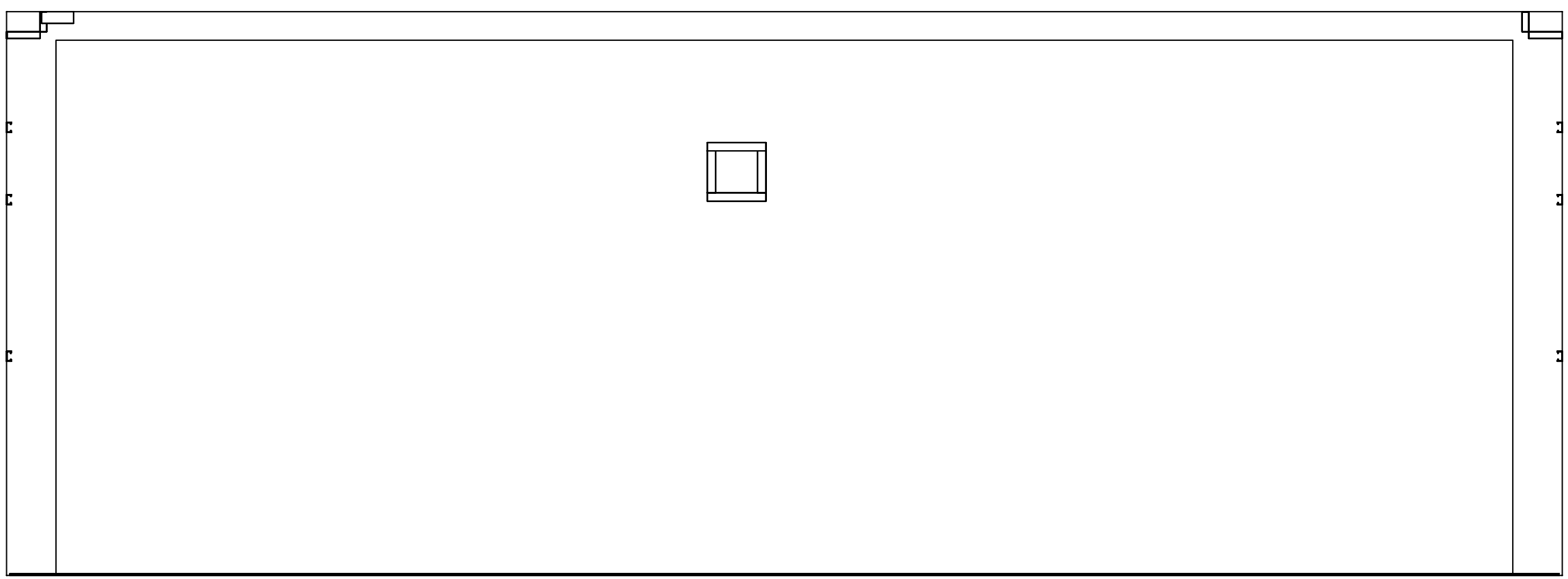

SECTION A–A SH 2
ROTATED 180°

ENGINEER	DATE	DRAWER	DATE	SIZE	CAGE CODE	DRAWING NUMBER	REV
J. ALLEN	89-01-13	MAB	95-10-11	D	91145	MFTT040101	B
NEXT ASSEMBLY		CHECKER		SCALE 1/10		SHEET 3	
FINAL		MAB	95-10-10				