REVISION HISTORY			
REV	DESCRIPTION	DATE	APPROVAL
D	REVISED AND PARTIALLY REDRAWN BY M. BEUSTER. EMERGENCY LIGHT ADDED.	2006-09-22	R A VOTAW

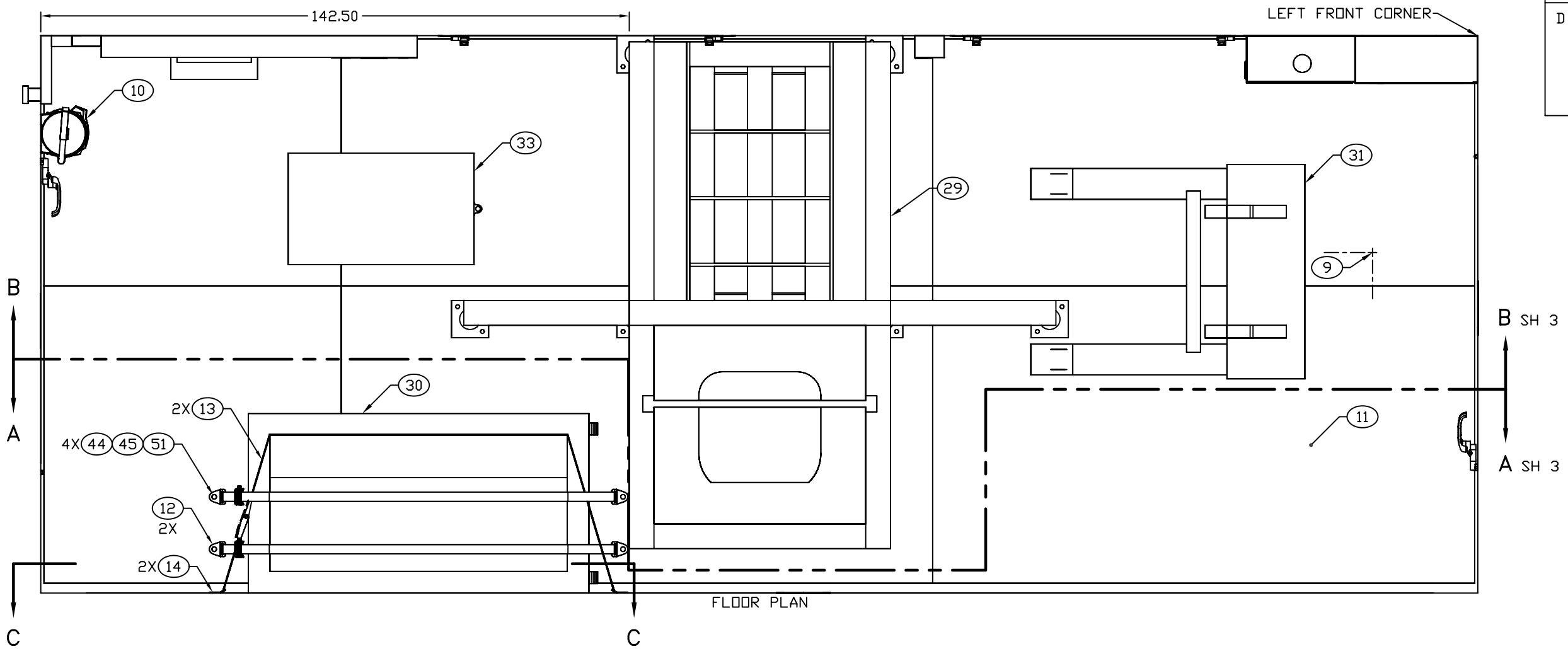

FLOOR PLAN

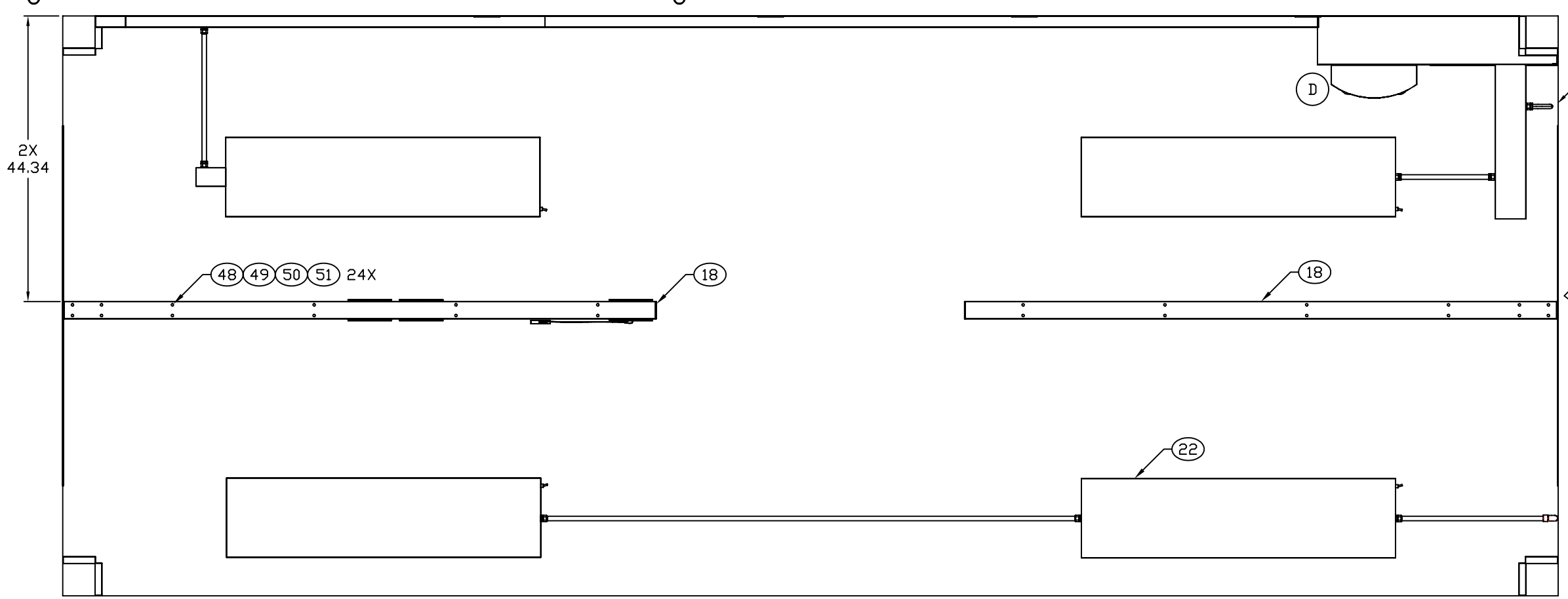

CEILING PLAN

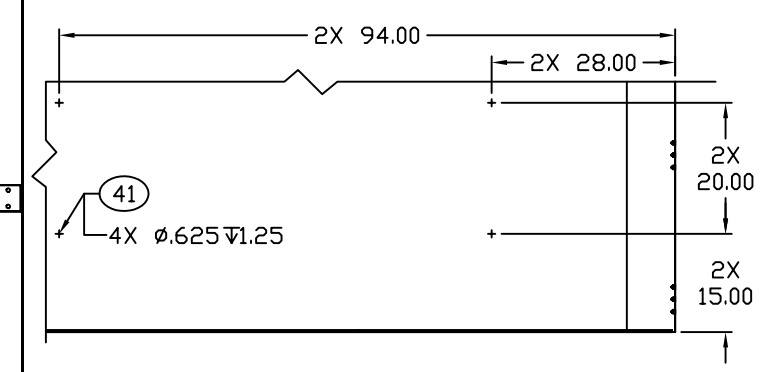

SECTION C–C
ROTATED 180°
SCALE 1/15
BLIND RIVET NUT INSTALLATION

ENGINEER	DATE	DRAWER	DATE	SIZE	CAGE CODE	DRAWING NUMBER	REV
J. ALLEN	88-12-22	MAB	02-07-01	D	91145	MFTT030101	D
NEXT ASSEMBLY		CHECKER					
FINAL		TN	00-04-19	SCALE 1/10		SHEET 2	

REVISION HISTORY			
REV	DESCRIPTION	DATE	APPROVAL
D	REVISED AND PARTIALLY REDRAWN BY M. BEUSTER. (2) ITEM ADDED.	2006-09-22	R A VOTAW

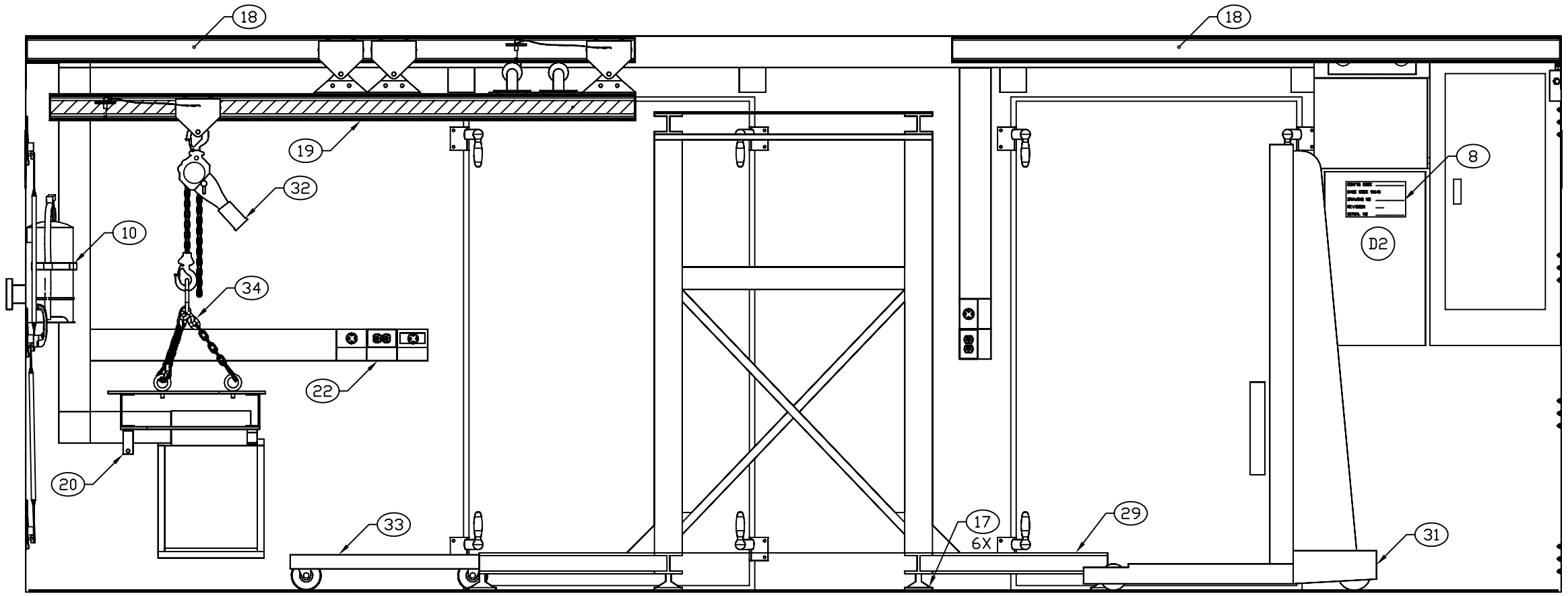

SECTION B–B SH 2

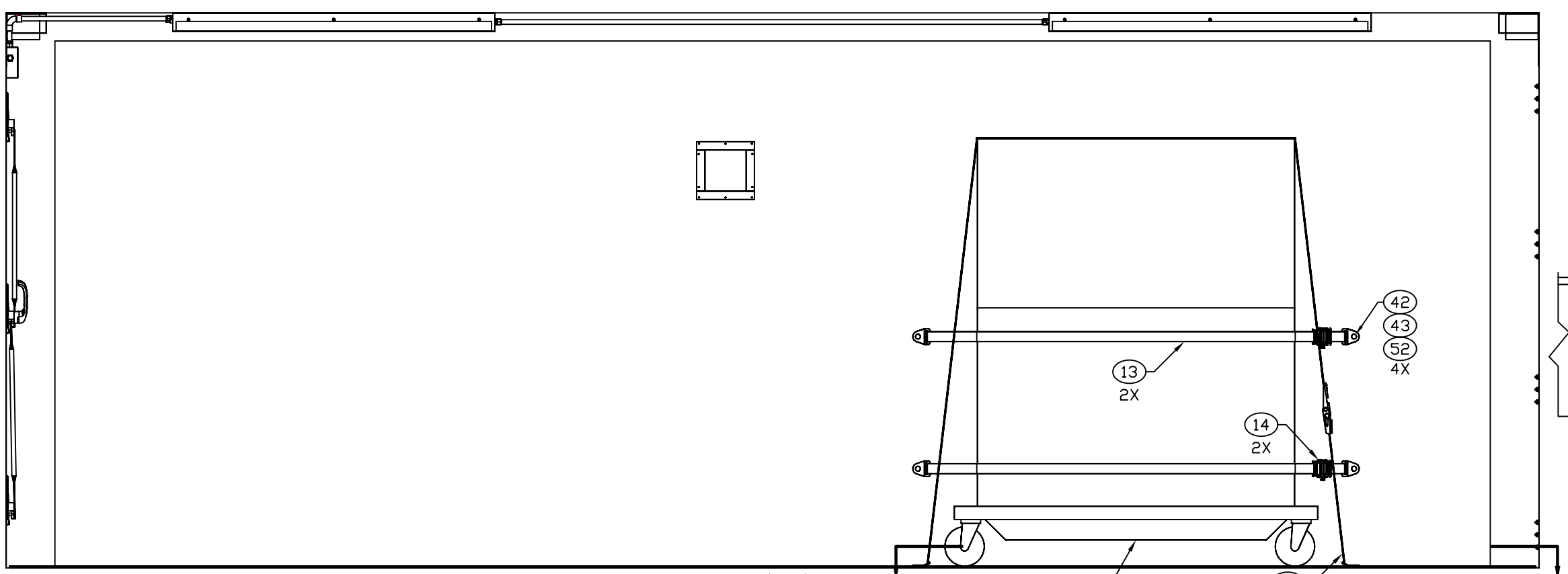

SECTION A–A SH 2
ROTATED 180°

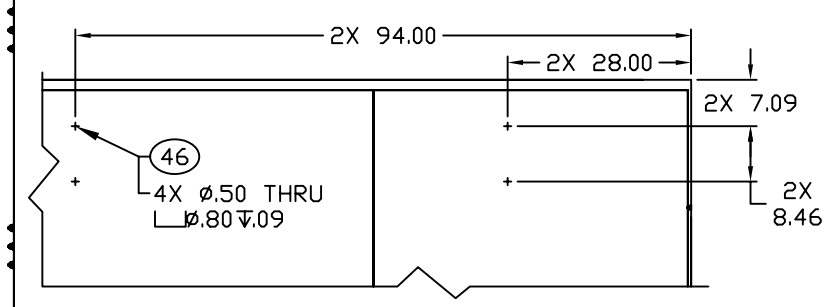

SECTION D–D
SCALE 1/15
BLIND RIVET NUT INSTALLATION

ENGINEER	DATE	DRAWER	DATE	SIZE	CAGE CODE	DRAWING NUMBER	REV
J. ALLEN	88-12-22	MAB	02-07-01	D	91145	MFTT030101	D
NEXT ASSEMBLY		CHECKER		SCALE 1/10		SHEET 3	
FINAL		TN	00-04-19				