REVISIONS			
REV	DESCRIPTION	DATE	APPROVAL
C	REDRAWN WITH CHANGES.		

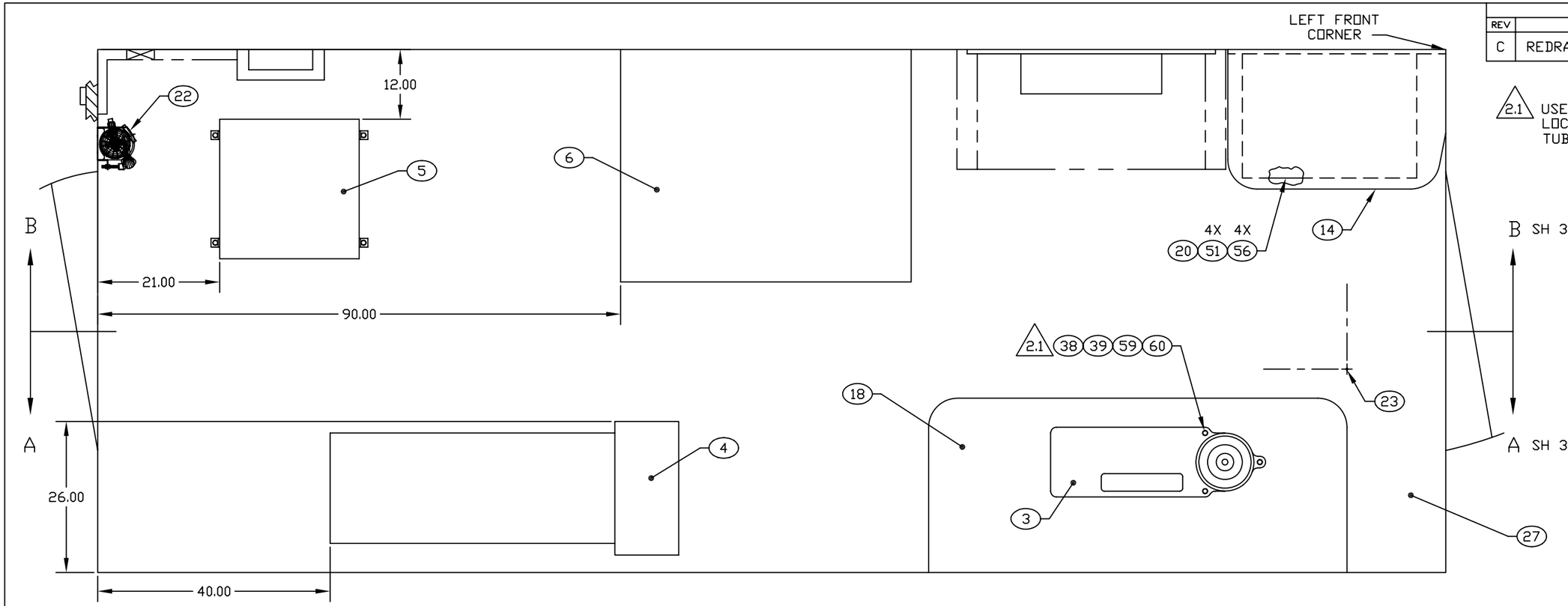

2.1 USE FIND NO 3, TUBE BENDER, TO LOCATE 3 HOLES ON FIND NO 18, TUBE BENDER WORK BENCH.

FLOOR PLAN

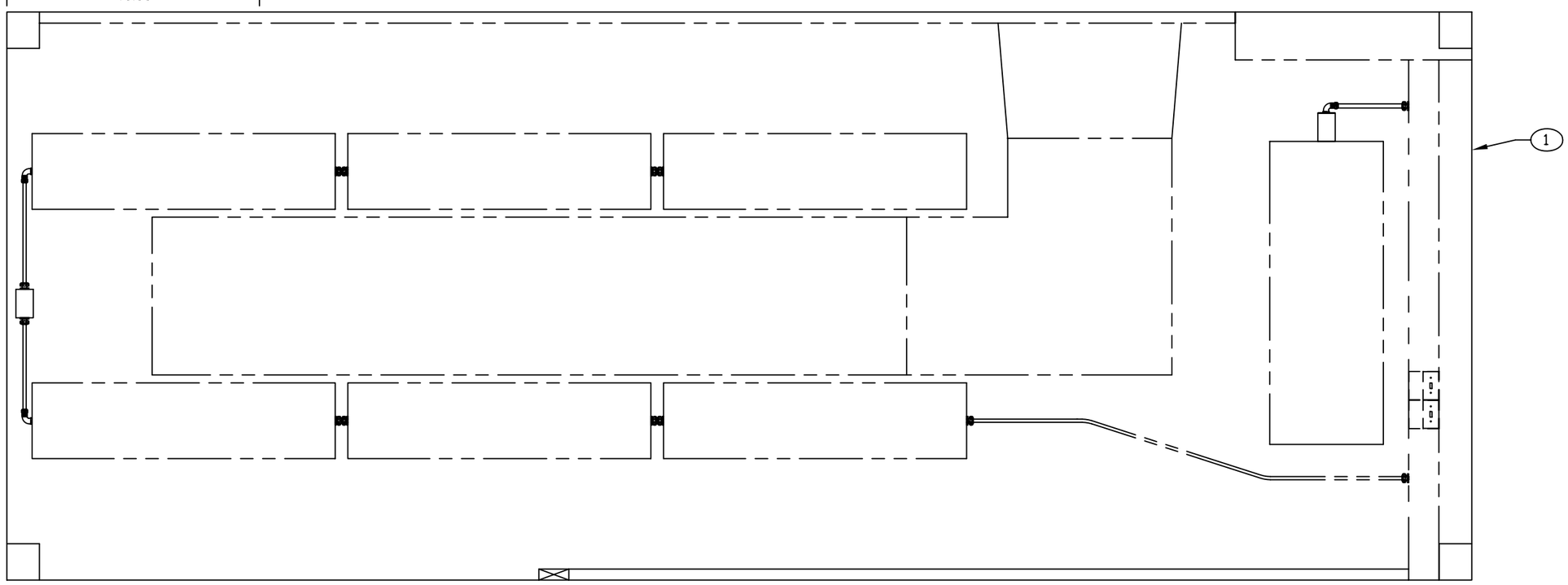

CEILING PLAN

ENGINEER	DATE	DRAWN BY	DATE	SIZE	CAGE CODE	DWG NO	REV
BALCE	85-11-18	TN	94-09-27	D	91145	MFTB010101	C
NEXT ASSEMBLY FINAL		CHECKER MAB	94-12-07	SCALE 1/10		SH 2	

TB011012.RVC

REVISIONS			
REV	DESCRIPTION	DATE	APPROVAL
C	REDRAWN WITH CHANGES.		

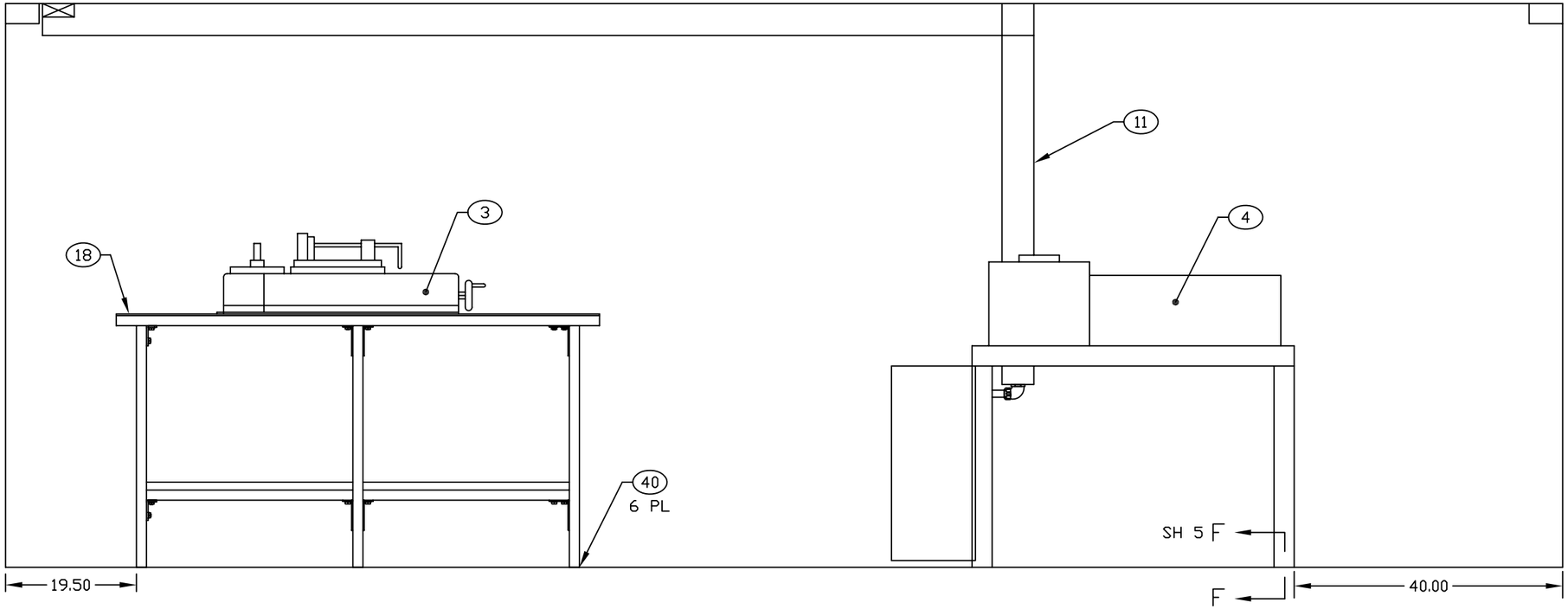

SECTION A-A
SH 2
ROTATED 180°

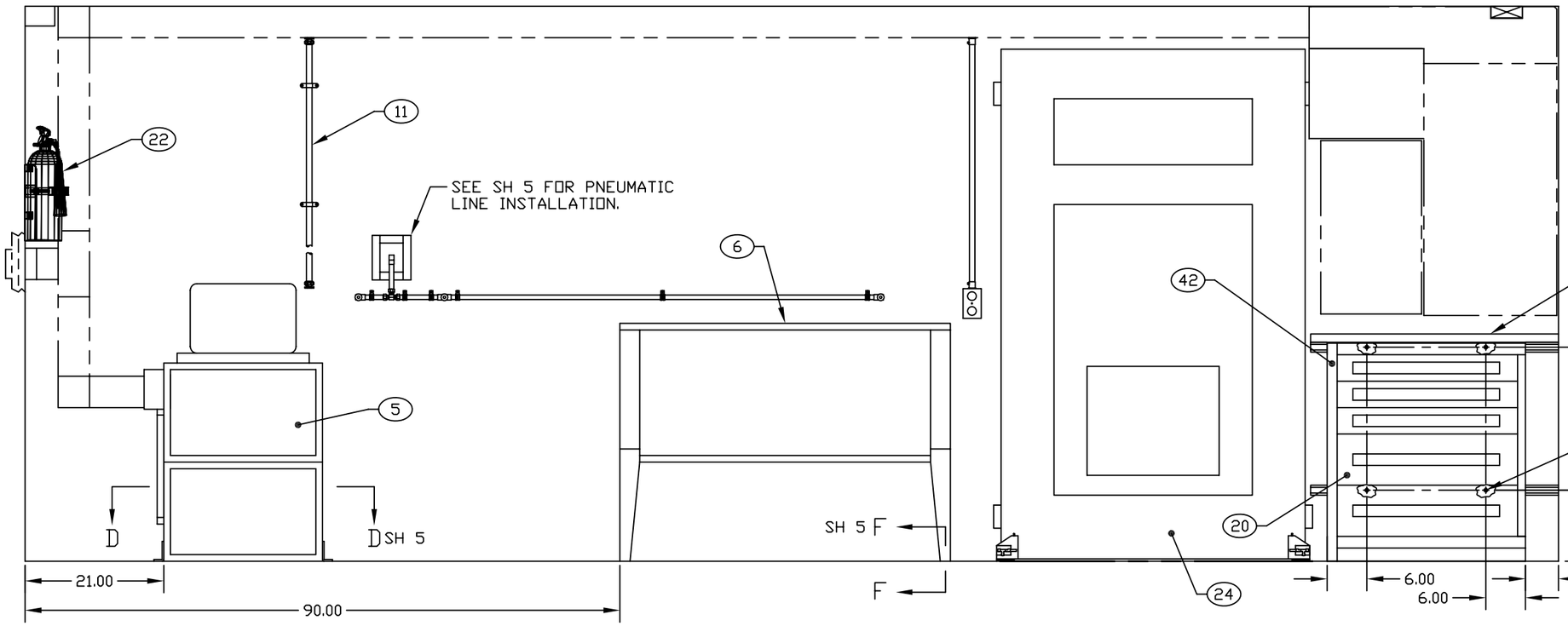

SECTION B-B
SH 2

ENGINEER	DATE	DRAWN BY	DATE	SIZE	CAGE CODE	DWG NO	REV
BALCE	85-11-30	TN	94-09-29	D	91145	MFTB010101	C
NEXT ASSEMBLY	FINAL	CHECKER MAB	94-12-07	SCALE 1/10		SH 3	

TB011013.RVC