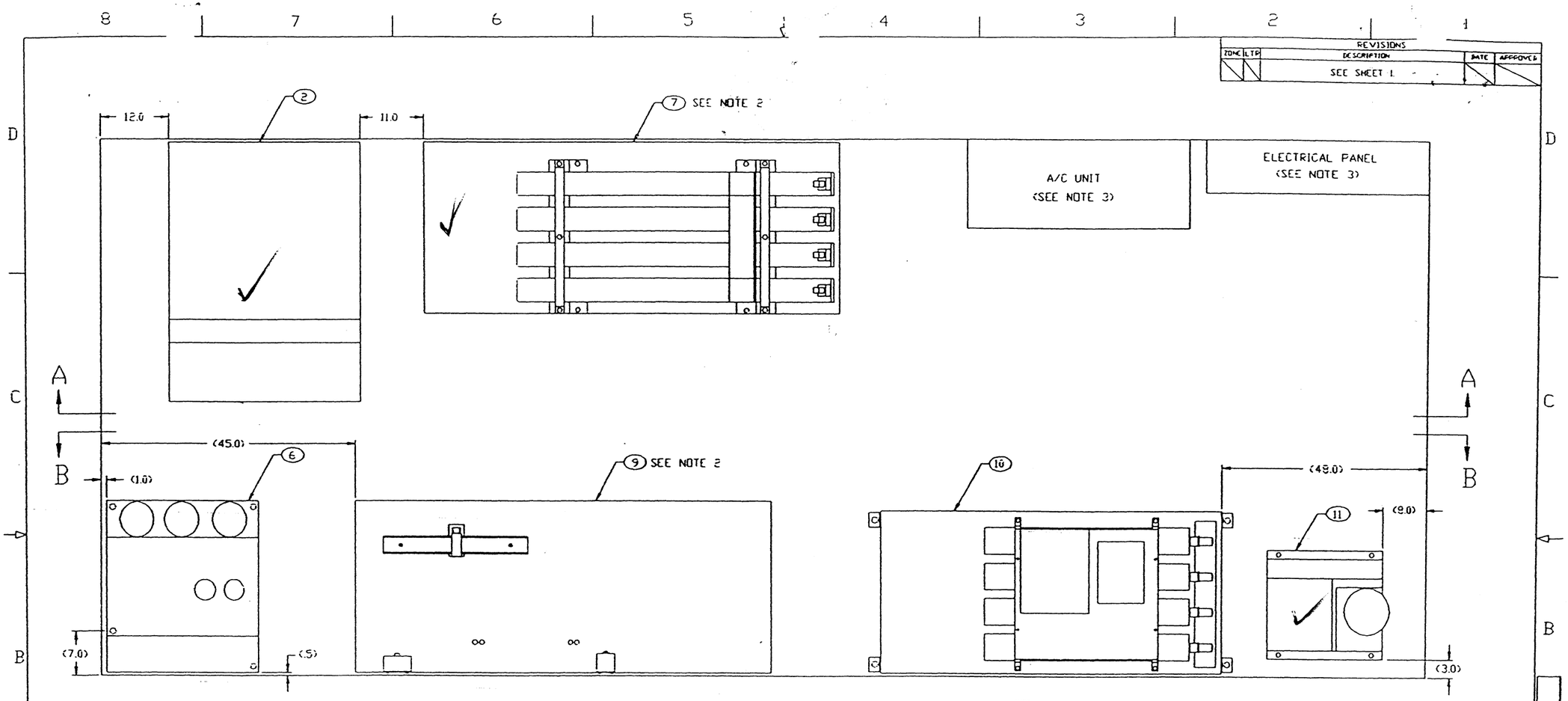

TOP VIEW

1104

CLASSIFICATION OF CHARACTERISTICS (VR-43A)

CRITICAL -
MAJOR -
MINOR -

Vectorcam Inc (865)388-SCAN(7226)	SIZE D	CODE IDENT NO 30003	NAVAIRSYSCOM DWG NO. 1988AS100	REV -
	SCALE 1.25=1	UNIT VI	SHEET 2 OF 5	

1988AS100

REVISIONS				
ZONE	LTR	DESCRIPTION	DATE	APPROVED
		SEE SHEET 1.		

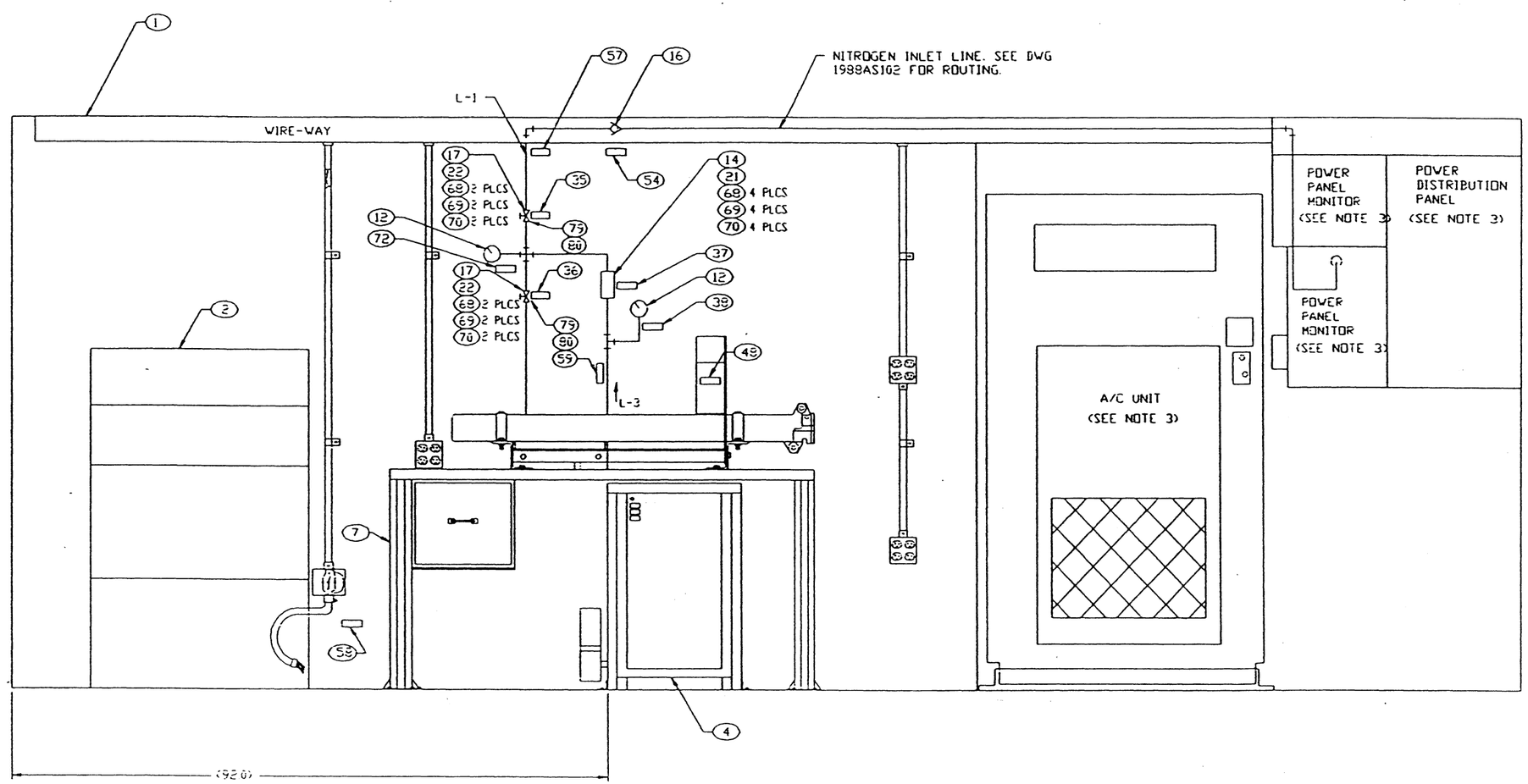

SECTION A-A

CLASSIFICATION OF CHARACTERISTICS (WR-43A)

CRITICAL -
MAJOR -
MINOR -

Vectorcam Inc	SIZE	CODE IDENT NO	NAVAIRSYSCOM DWG NO	REV
(805)388-SCAN(7226)	D	30003	1988AS100	-
	SCALE 1.25=1	UNIT WT	SHEET 3 OF 5	

1988AS100

REVISIONS				
ZONE	LTR	DESCRIPTION	DATE	APPROVED
		SEE SHEET 1.		

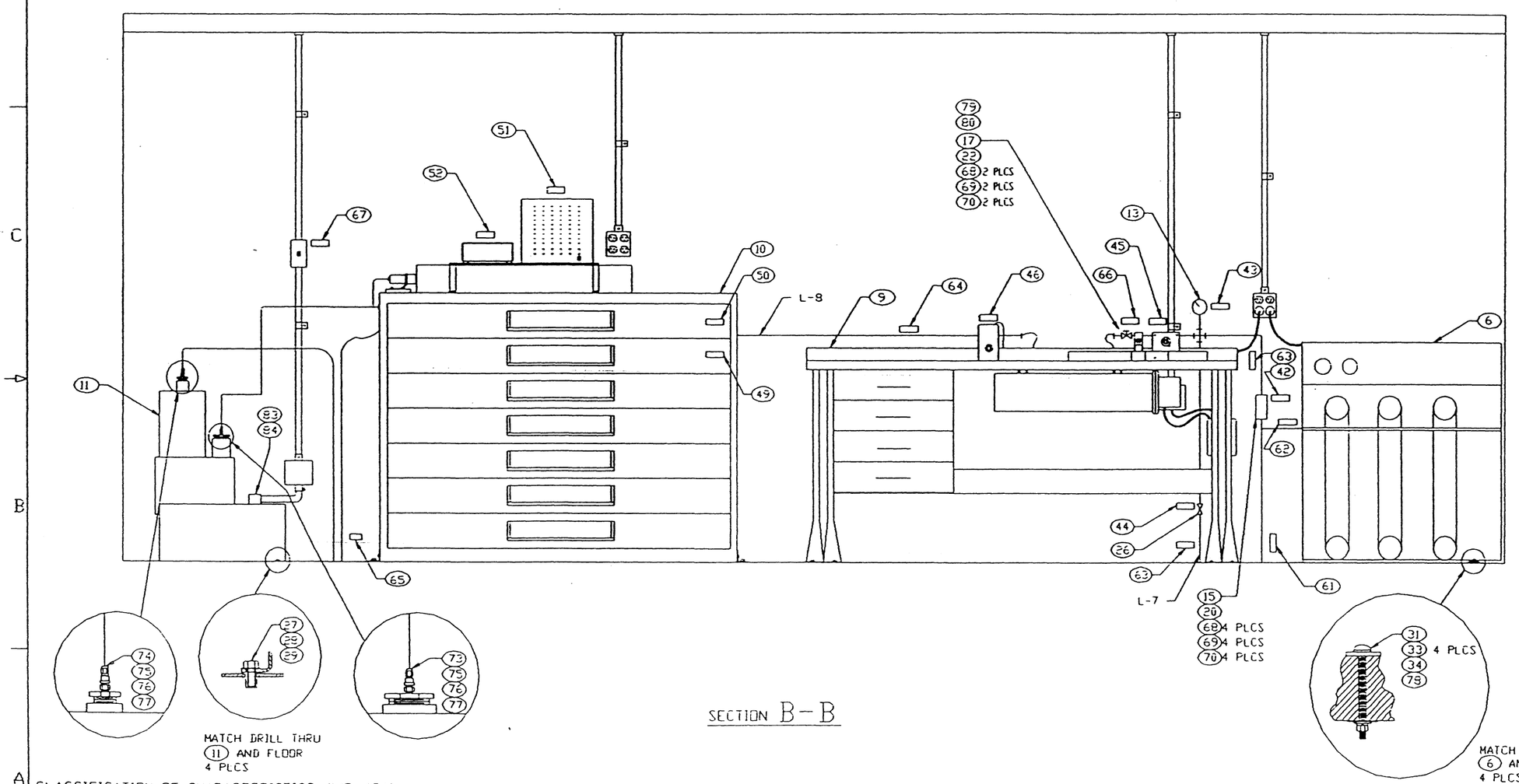

SECTION B-B

CLASSIFICATION OF CHARACTERISTICS (WR-43A)

CRITICAL -
MAJOR -
MINOR -

	SIZE	CODE IDENT NO	NAVAIRSTSCOM DWG NO	REV
VECTOSCAN Inc (863)382-SCAN(7226)	D	30003	1988AS100	-
	SCALE 1.25=1	UNIT WT		SHEET 4 OF 5

1988AS100