REVISION HISTORY			
REV	DESCRIPTION	DATE	APPROVAL
D	REVISED AND PARTIALLY REDRAWN BY M. BEUSTER. FORMAT UPDATED.	03-05-16	R A VOTAW

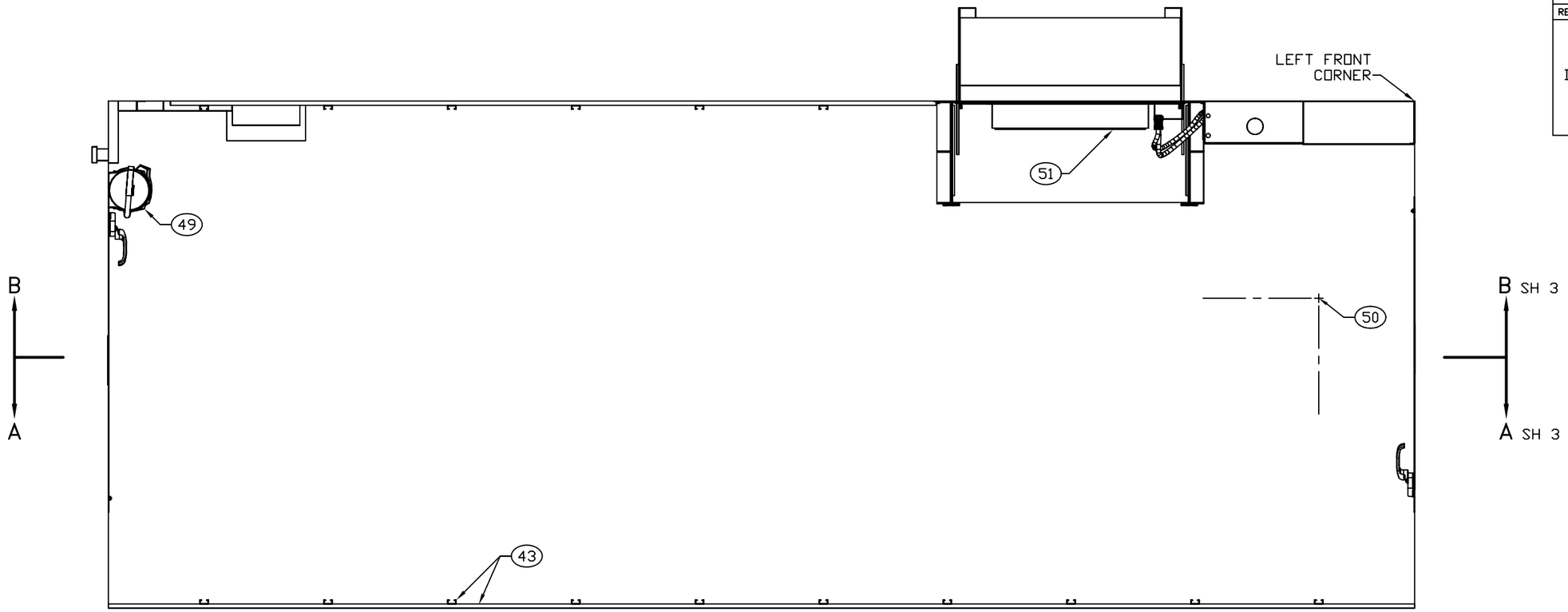

FLOOR PLAN

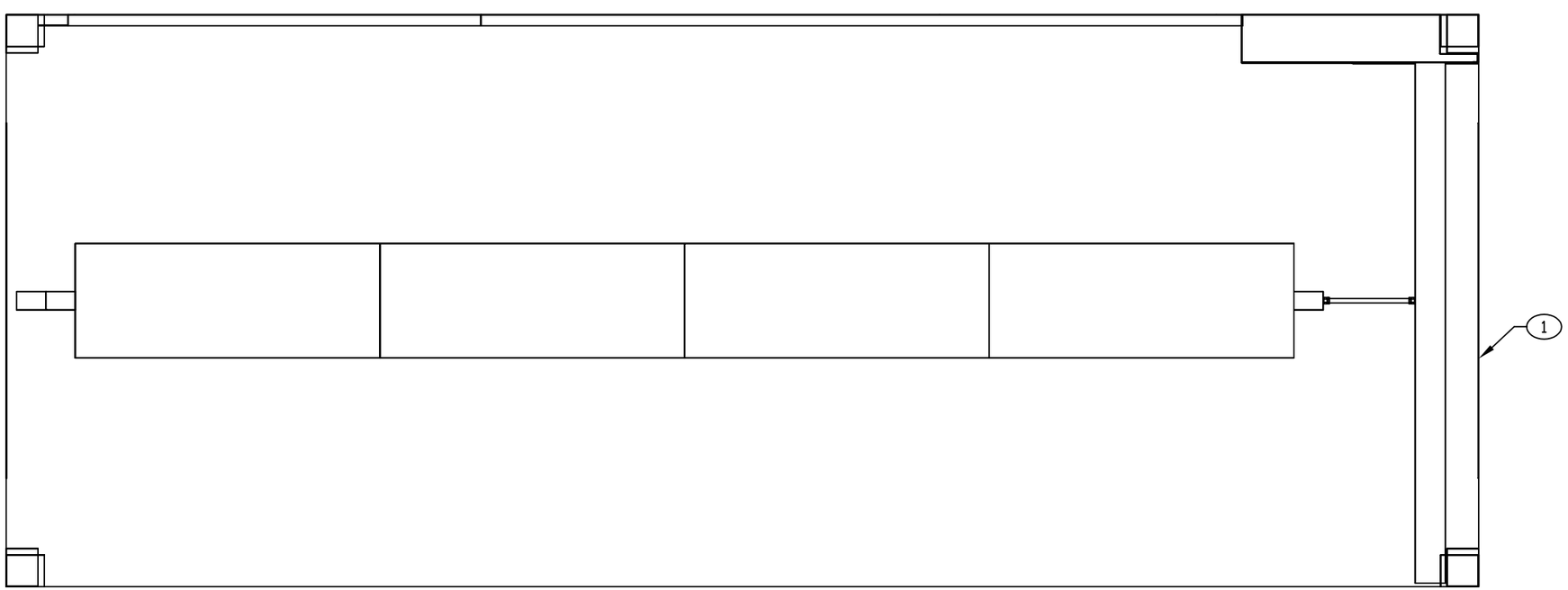

CEILING PLAN

-1

ENGINEER	DATE	DRAWER	DATE	SIZE	CAGE CODE	DRAWING NUMBER	REV
SIDDENS	83-12-01	MAB	97-12-05	D	91145	MFSU120201	D
NEXT ASSEMBLY FINAL		CHECKER RJ	87-11-16	SCALE 1/11		SHEET 2	

REVISION HISTORY			
REV	DESCRIPTION	DATE	APPROVAL
D	REVISED AND PARTIALLY REDRAWN BY M. BEUSTER. FORMAT UPDATED.	03-05-16	R A VOTAW

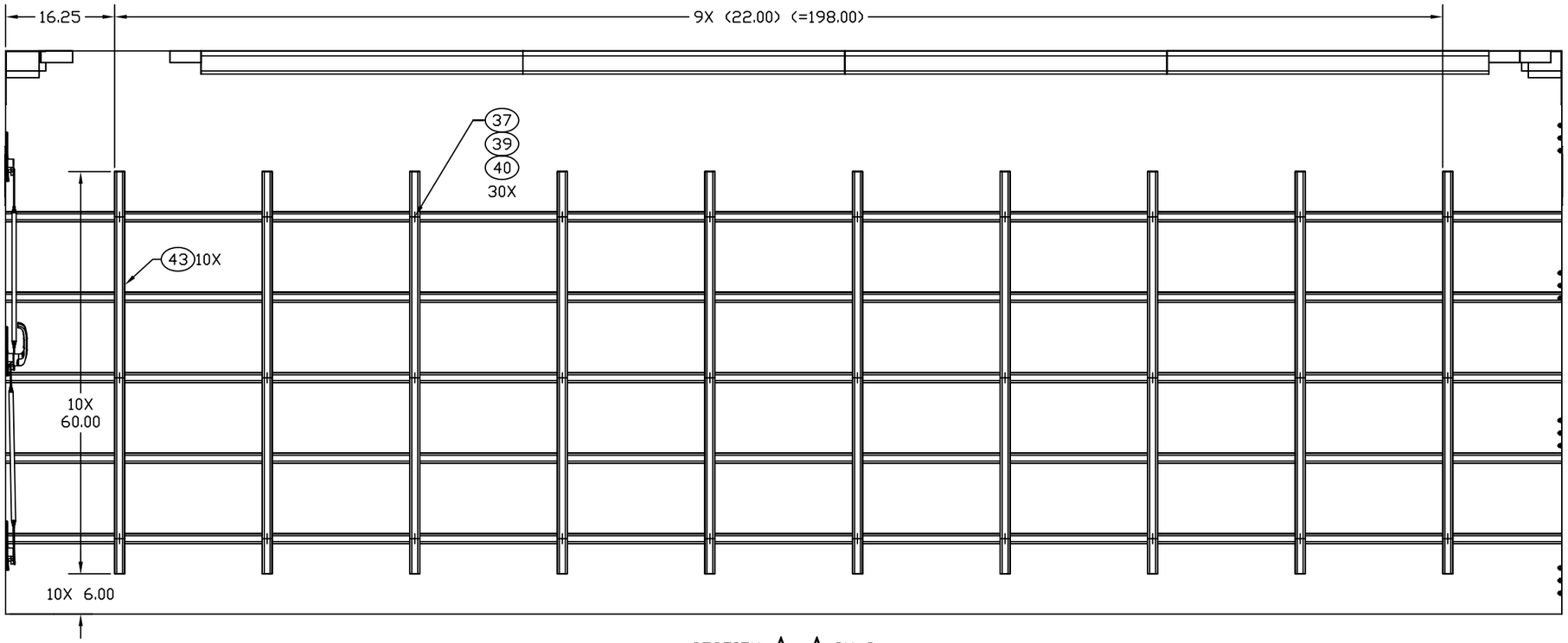

SECTION A–A SH 2
ROTATED 180°

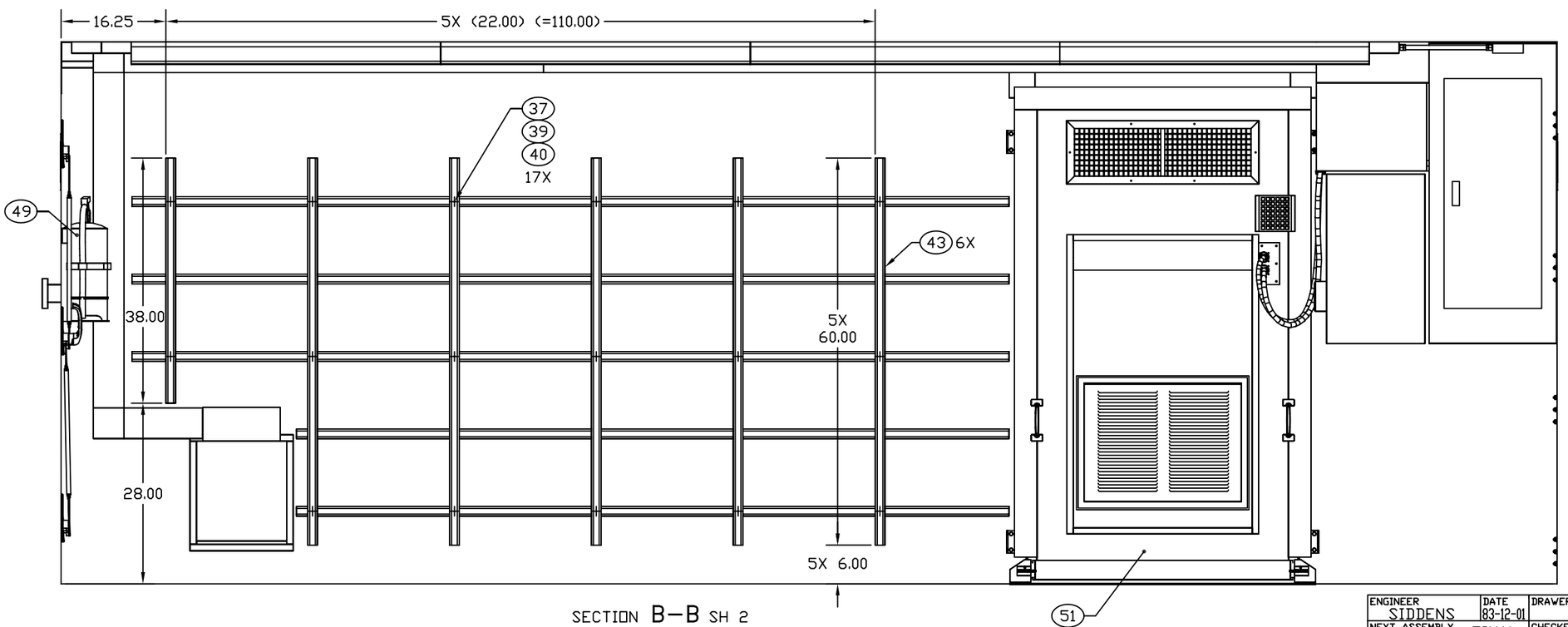

SECTION B–B SH 2

ENGINEER	DATE	DRAWER	DATE	SIZE	CAGE CODE	DRAWING NUMBER	REV
SIDDENS	83-12-01	MAB	97-12-05	D	91145	MFSU120201	D
NEXT ASSEMBLY	FINAL	CHECKER RJ	87-11-16	SCALE 1/10		SHEET 3	

REVISION HISTORY			
REV	DESCRIPTION	DATE	APPROVAL
D	REVISED AND PARTIALLY REDRAWN BY M. BEUSTER.	03-05-16	R A VOTAW

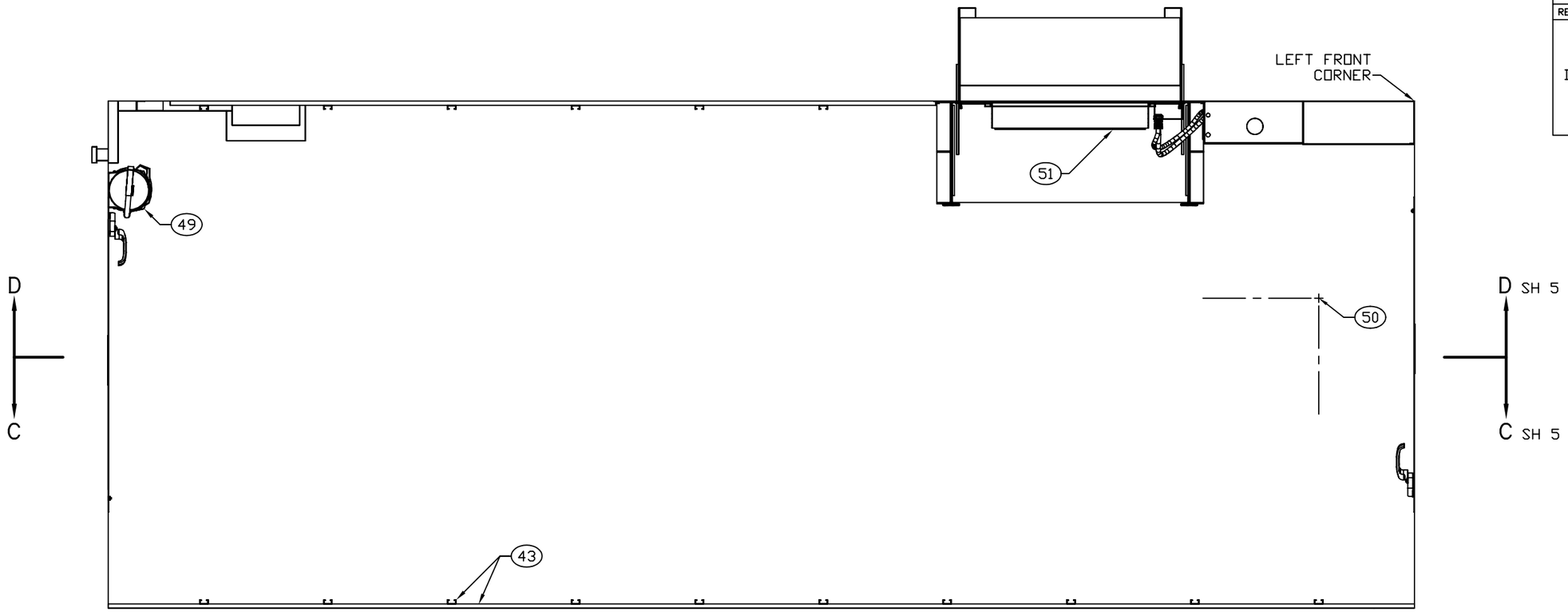

FLOOR PLAN

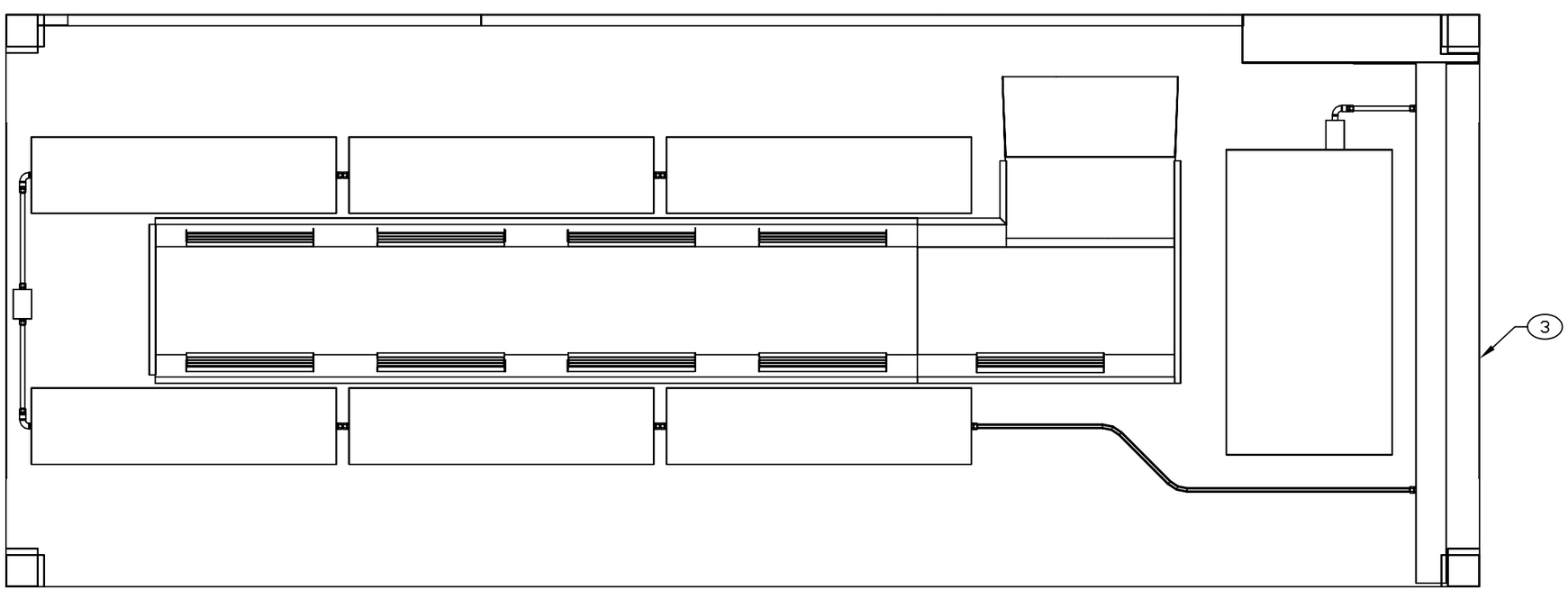

CEILING PLAN

-3

ENGINEER	DATE	DRAWER	DATE	SIZE	CAGE CODE	DRAWING NUMBER	REV
SIDDENS	83-12-01	MAB	97-12-05	D	91145	MFSU120201	D
NEXT ASSEMBLY FINAL		CHECKER RJ	87-11-16	SCALE 1/11		SHEET 4	

REVISION HISTORY			
REV	DESCRIPTION	DATE	APPROVAL
D	THIS SHEET ADDED.	03-05-16	R A VOTAW

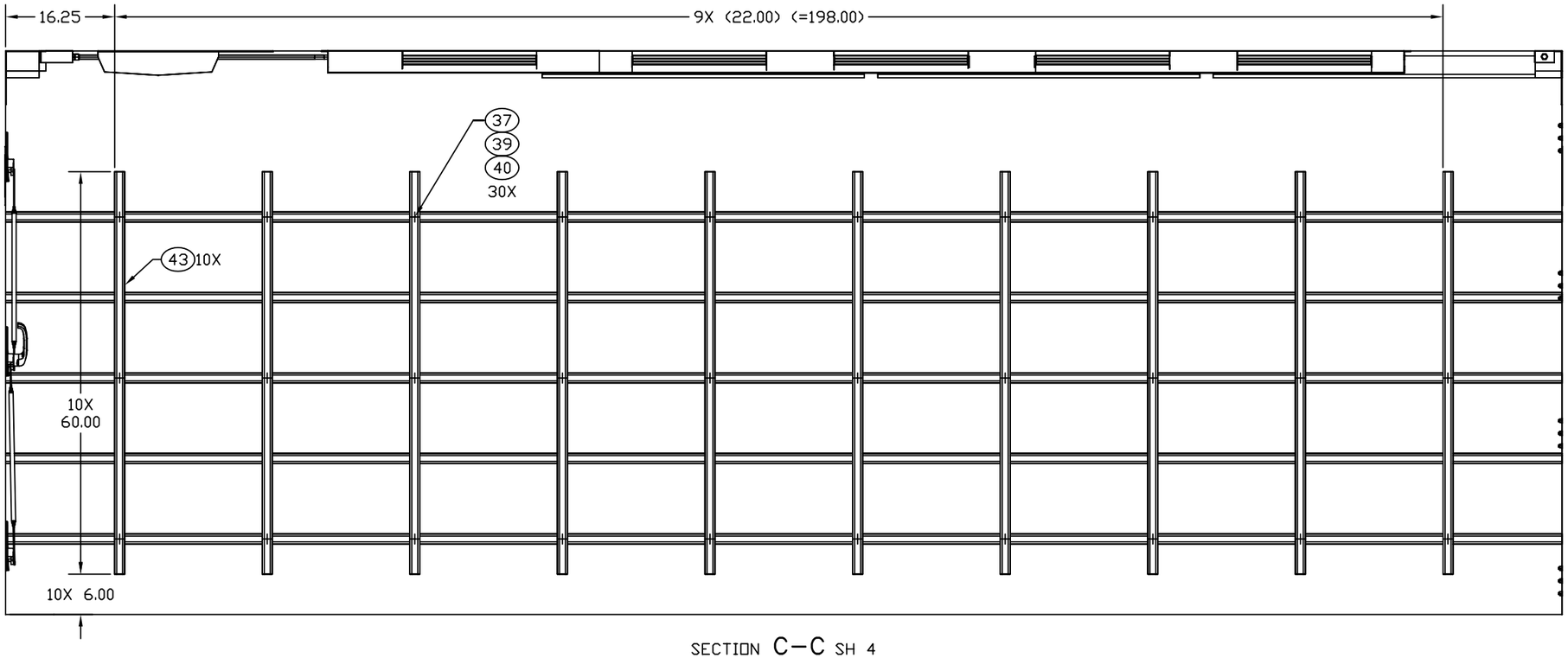

SECTION C–C SH 4
ROTATED 180°

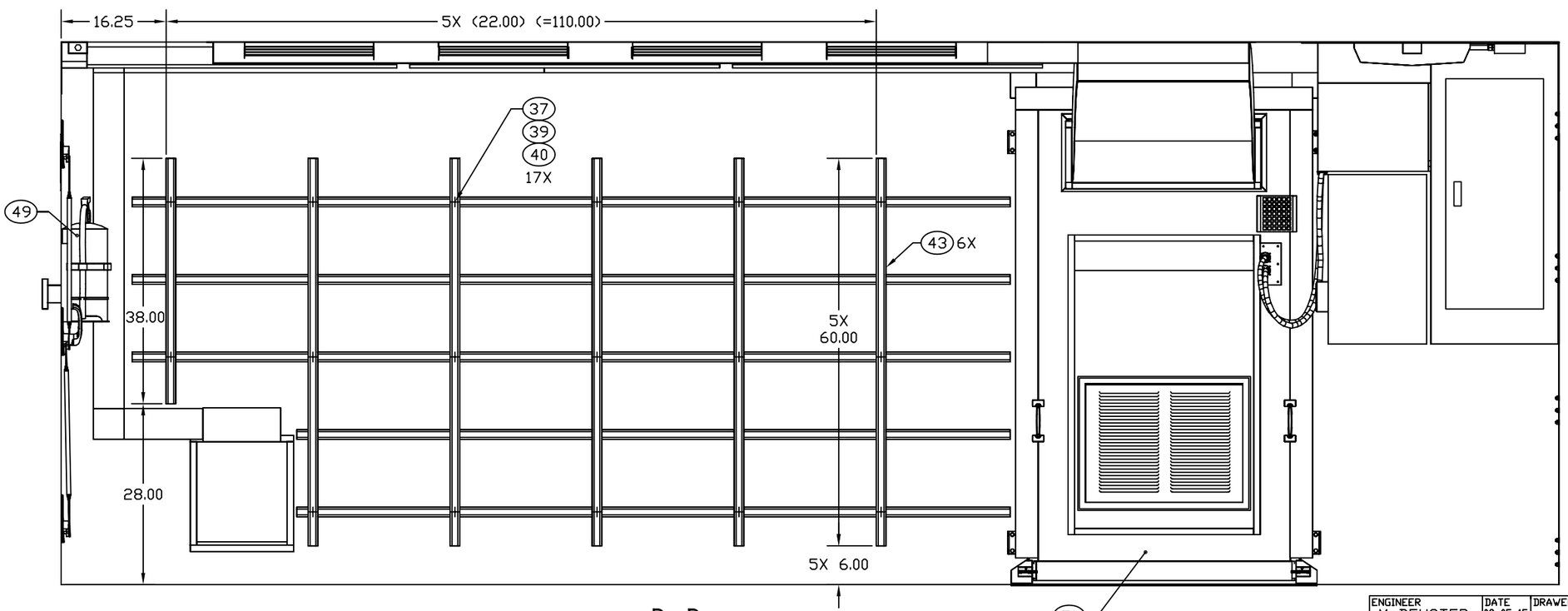

SECTION D–D SH 4

ENGINEER	DATE	DRAWER	DATE	SIZE	CAGE CODE	DRAWING NUMBER	REV
M BEUSTER	03-05-15	MAB	03-05-15	D	91145	MFSU120201	D
NEXT ASSEMBLY	FINAL	CHECKER TN	03-05-16	SCALE 1/10		SHEET 5	