REVISIONS			
REV	DESCRIPTION	DATE	APPROVAL
C	REVISED AND PARTIALLY REDRAWN BY M. BEUSTER.	03-03-14	R A VOTAW

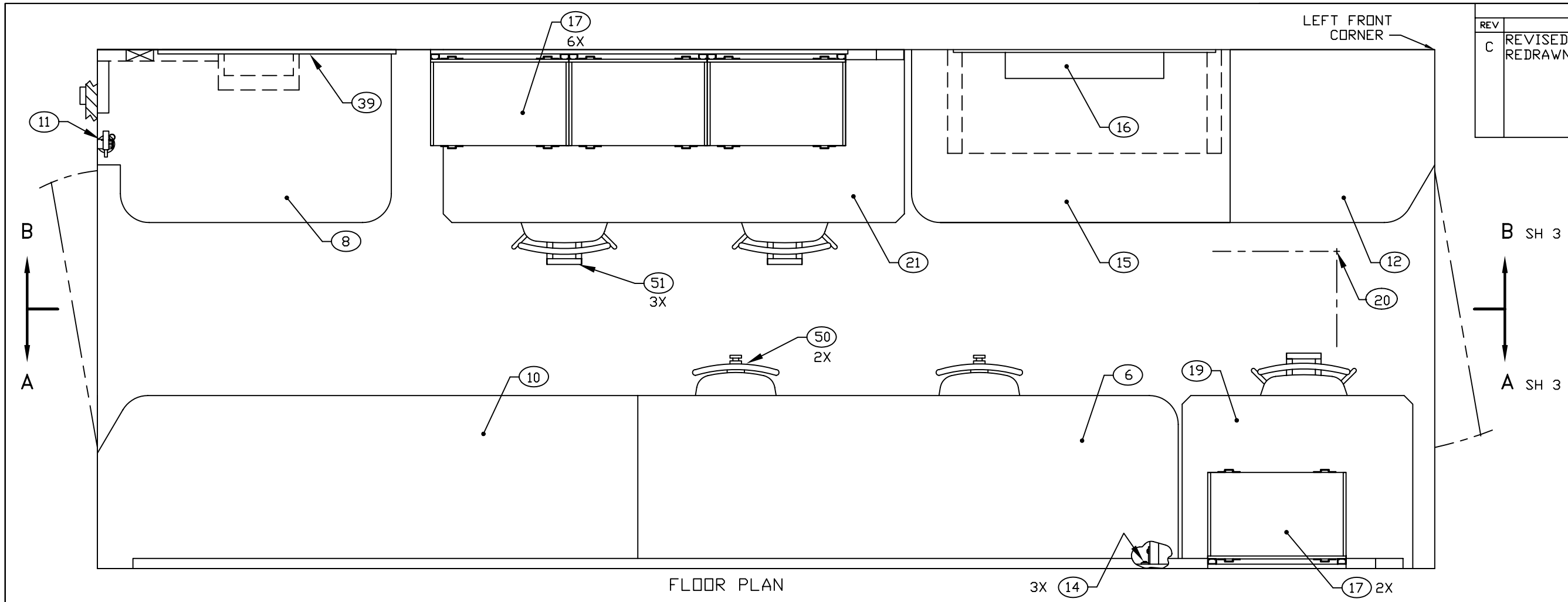

FLOOR PLAN

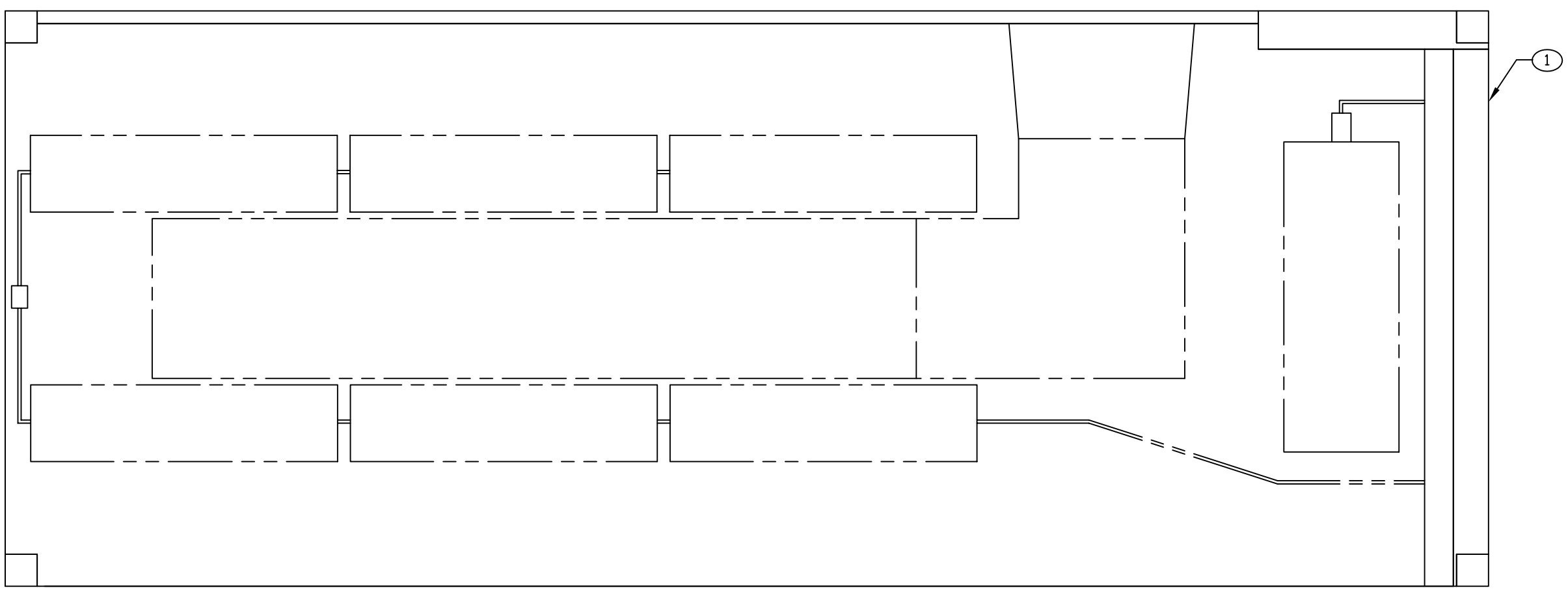

CEILING PLAN

ENGINEER	DATE	DRAWN BY	DATE	SIZE	CAGE CODE	DWG NO	REV
P. VICENCIO	91-04-03	P. VICENCIO	91-04-03	D	91145	MFSU040401	C
NEXT ASSEMBLY FINAL		CHECKER TN	03-02-12	SCALE 1/10		SH 2	

REVISIONS			
REV	DESCRIPTION	DATE	APPROVAL
D	REVISED AND PARTIALLY REDRAWN BY T H NGUYEN. (1) ITEM ADDED. (5) DIMENSION CHANGED.	03-05-16	R A VOTAW

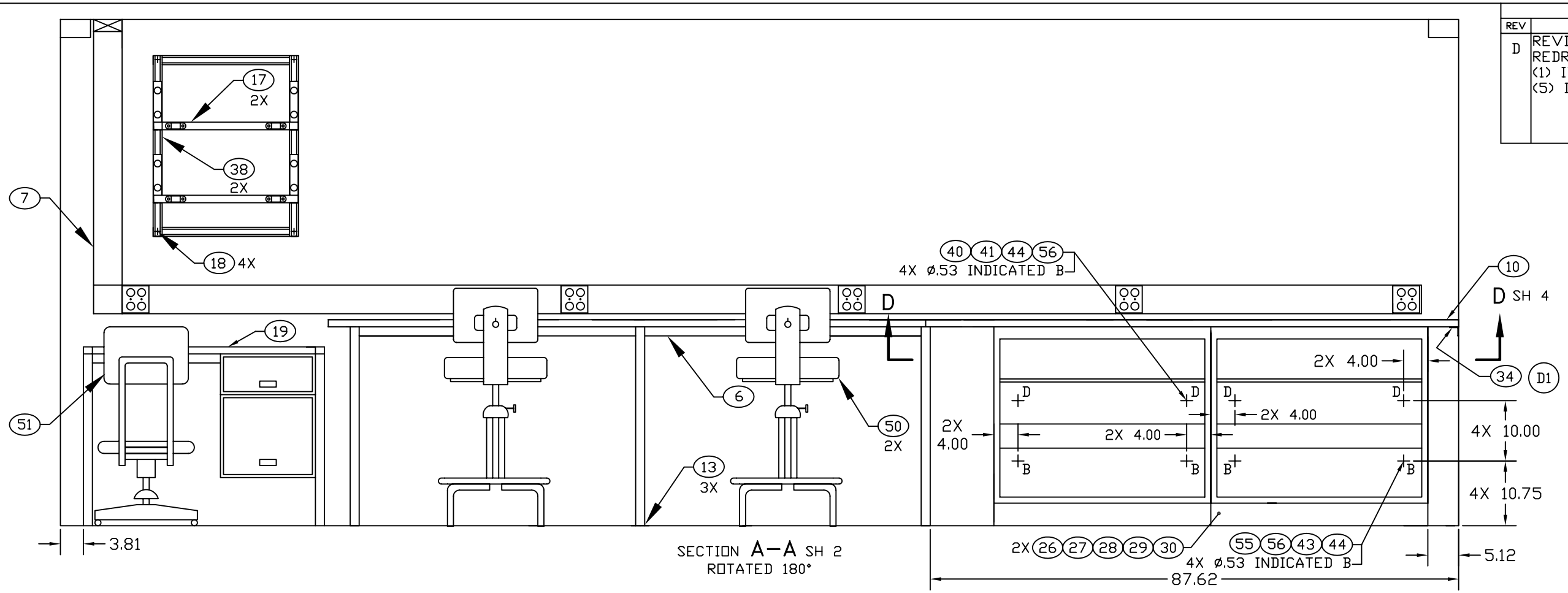

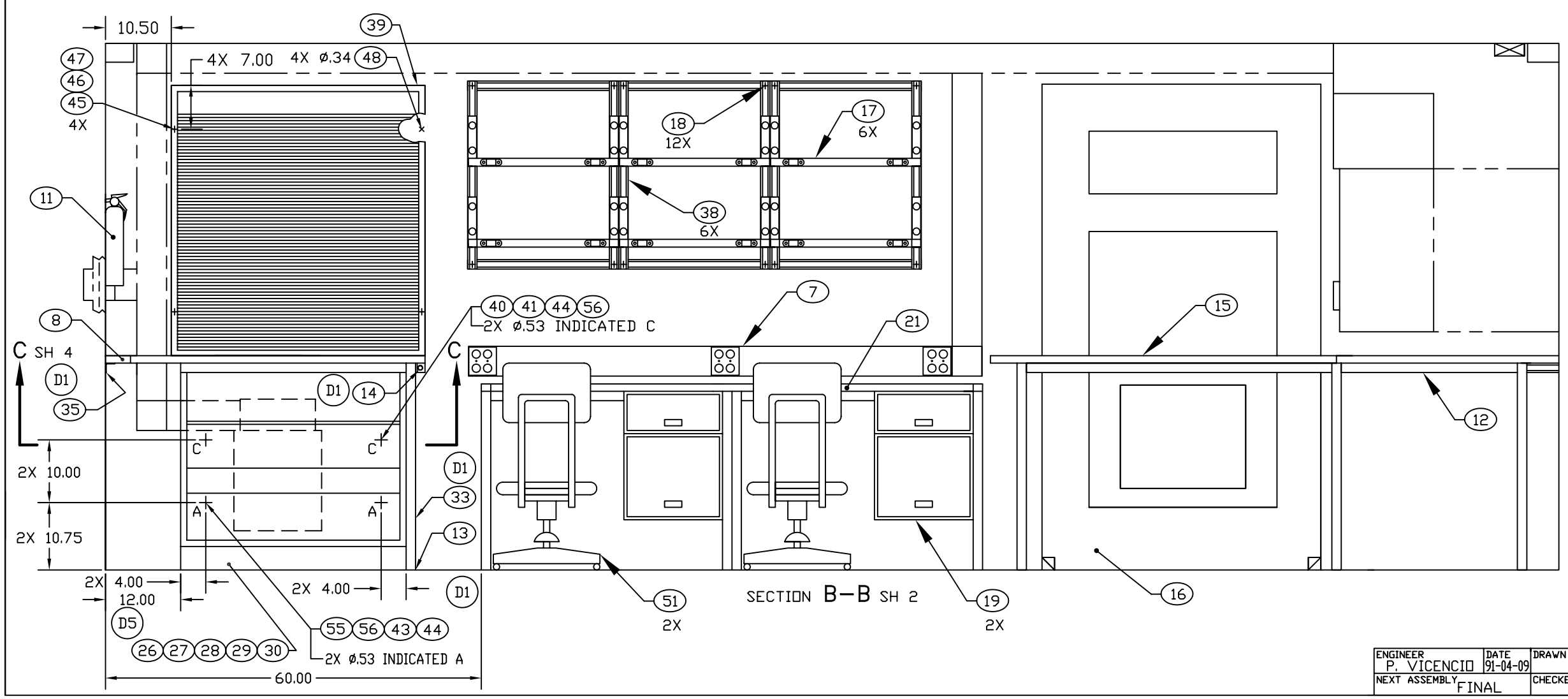

ENGINEER	DATE	DRAWN BY	DATE	SIZE	CAGE CODE	DWG NO	REV
P. VICENCIO	91-04-09	EEM	99-03-10	D	91145	MFSU040401	D
NEXT ASSEMBLY FINAL		CHECKER MAB	99-04-12	SCALE 1/10		SH 3	